WARM HOME
GREEN AND
HEALTHY HOME

CATALOGUE

HOME CREATOR

HOME CREATOR

HOME CREATOR GROUP LTD
Tel: +971 558432055
Web: www.homecreater-gcc.com
Add: 167-169 GREAT PORTLAND STREET , LONDON ,
UNITED KINGDOM W1W 5PF

VISION

Create the Leading Global Brand of Brass Valve

MISSION

Build High-quality Valve and Enhance Customer Satisfaction

SIX VALUES

- Integrity
- Manner
- Innovation
- Pragmatist
- Value
- Gratitude

Home Creator Provide Customers All Over the World with Complete Plumbing System Solution

COMPANY PROFILE

Home Creator is a joint- stock company operate multiple factories in China and Southeast Asia , engaged in the research & development , manufacturing and sales of valves , sanitary ware , valves equipment for Gas system , HVAC system and Plumbing system for over 40 years , The products cover brass valve , bronze valve and ductile iron for Plumbing , sanitary ware , heating and refrigeration system , the factory covers an area of more than 28,000 square meters with over 1000 employees .
All of our valves are designed and manufacture according to European and American standard , we obtained CE , DVGW , INIG , WRAS , ACS , NSF , CUPC , CSA , AB 1953 and other certificate , actively moving towards an international enterprise group .
Home Creator is equipped with a national laboratory testing center , all of our valves are designed and manufactured in accordance with ISO17025 standards , , inverted metallographic microscope , pseudo system comprehensive test bench and more than 100 sets of advanced equipment at home and abroad which effectively ensure the testing capabilities of different valves .

DVGW CERT GMBH

WRAS APPROVED PRODUCT

CE

AGA

ACS

UPC C ®

FM APPROVED

C UL US

C SA US

NSF / ANSI 61

AUTOMATIC EQUIPMENT

99%

The first pass rate has been increased to 99%

From traditional line that needs 3 transfer times and 15 workers per line to lean production line with only 1 transfer time and 5 workers, Home creator's capacity has improved a lot these years.

Not only saving labor costs, the automatic lean production line also increases the productivity of each employee from 160 pieces/8 hours to 450 pieces/8 hours, and the first pass rate has been increased to 99%! The strong delivery capability of scheduled and qualified " provides consistent and excellent products and services to customers all over the world.

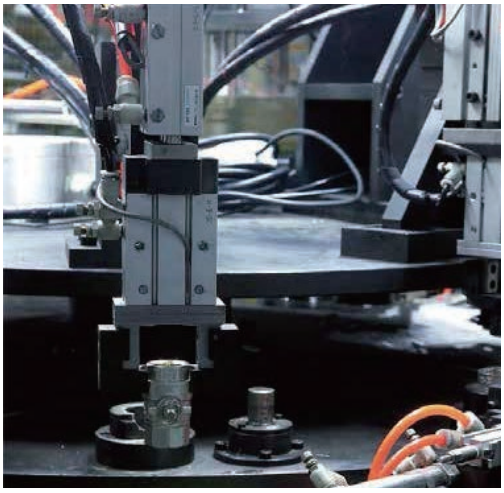

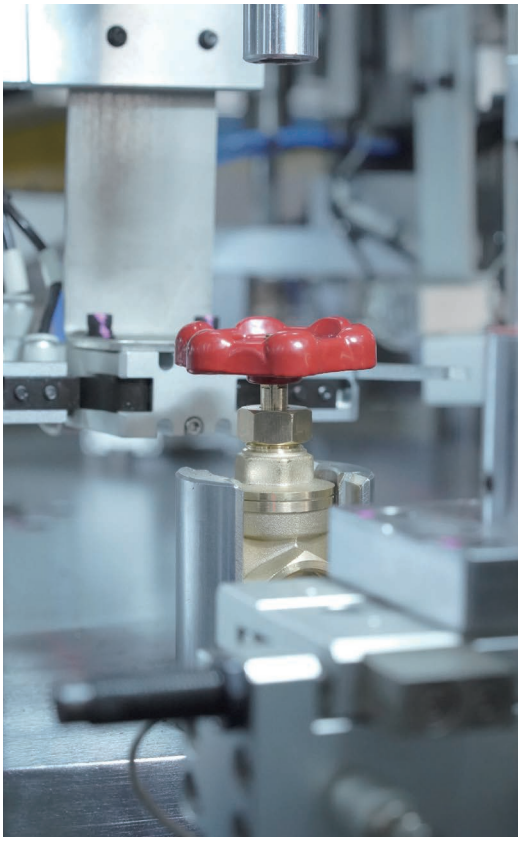

VERTICAL PRODUCTION SUPPLY CHAIN

With manufacturing ability from material to spare parts, Home creator has formed a vertical production supply chain, effectively improving the capacity and shortening the delivery time.


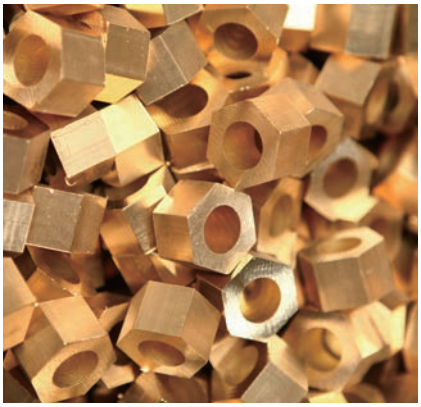





SPARE PARTS PRODUCTION

80%

80% automatic production of core components

90%

90% of spare parts production

Home creator has realized 80% automatic production of core components and 90% of spare parts through continuous automatic production equipment replacement.

In order to pursue the quality concept of processing, standardizing, refinement and branding, Home creator will make solid progress towards the goal of becoming a smart factory!

Automatic

- Emergency Stop
- Visual Management
- Prevent Recurrence

Just in time

- Process Fluidity
- Rhythm production
- Push Production

Lean Production

- Reduction of Cost
- Eliminating Waste
- Continuous Improvement

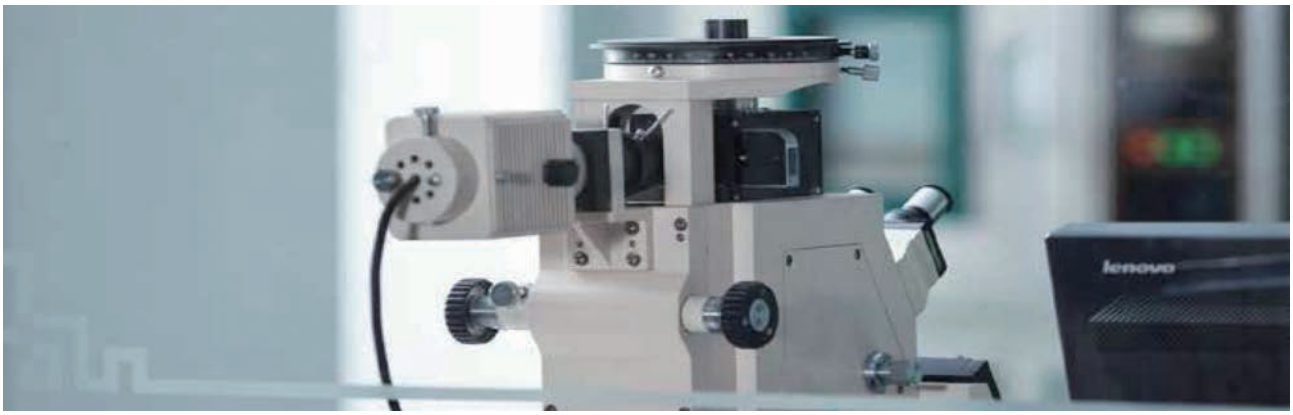
lenovo

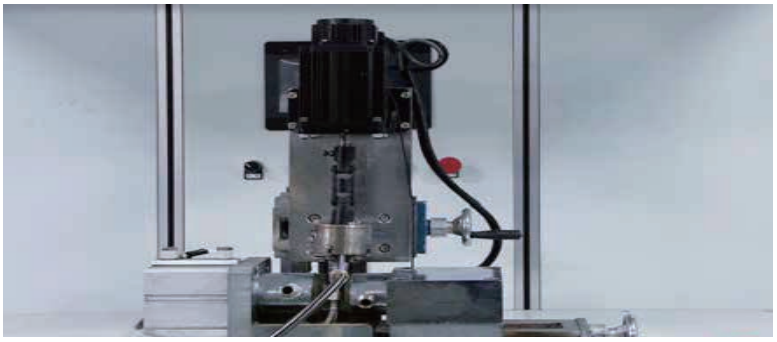

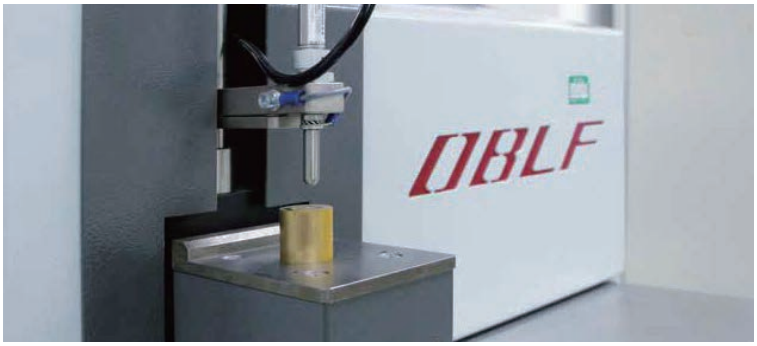
DBLF

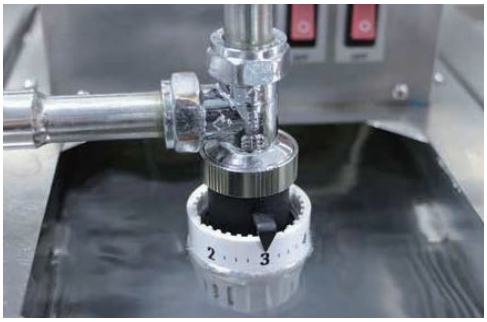

CNAS LAB

1000+

Covers an area of
1,000 square meters

80+

More than
80 equipment

100+

Including over
100 testing items

The CNAS testing center is a comprehensive functional unit including testing, measurement, simulation and display with 15 functional subareas. In 2010, it was approved by China National Accreditation Service for Conformity Assessment (CNAS) for the first time.

The testing center covers an area of 1,000 square meters, with more than 80 equipment, including over 100 testing items, involving materials analysis, geometric measurement, aging reliability, mechanical properties, physical/chemical analysis, fluid mechanics, metrology, calibration and other fields, achieving "One Report, Global Access".

As the company's internal laboratory, the testing center provides services for valve product quality assessment and internal quality analysis, and provides a large amount of testing data for new product s, customer complaint defective product analysis, and product process control. This medium-large-sized testing center with advanced level is also the company's external display window.

Performance

*Using the ground source heat pump as a heat source in winter,take gd use of the heating of underground water and heat pump host,through the hydraulic balance module,hierachical, partial pressure to distribute the different temperature and flow demand ,reasonably and evenly deliver the heat to heating facilities in each floor and room ,like heat sink ,towel rack ,floor heating ,domostic hot water.

*Better in sustainability of energy ,carbon-free environment protection and 20% in energy-saving, greatly improve the efficiency of energy management. Thereby enhancing the level of green energy-saving, is the new star among the green energy-saving products.

Application Diagram

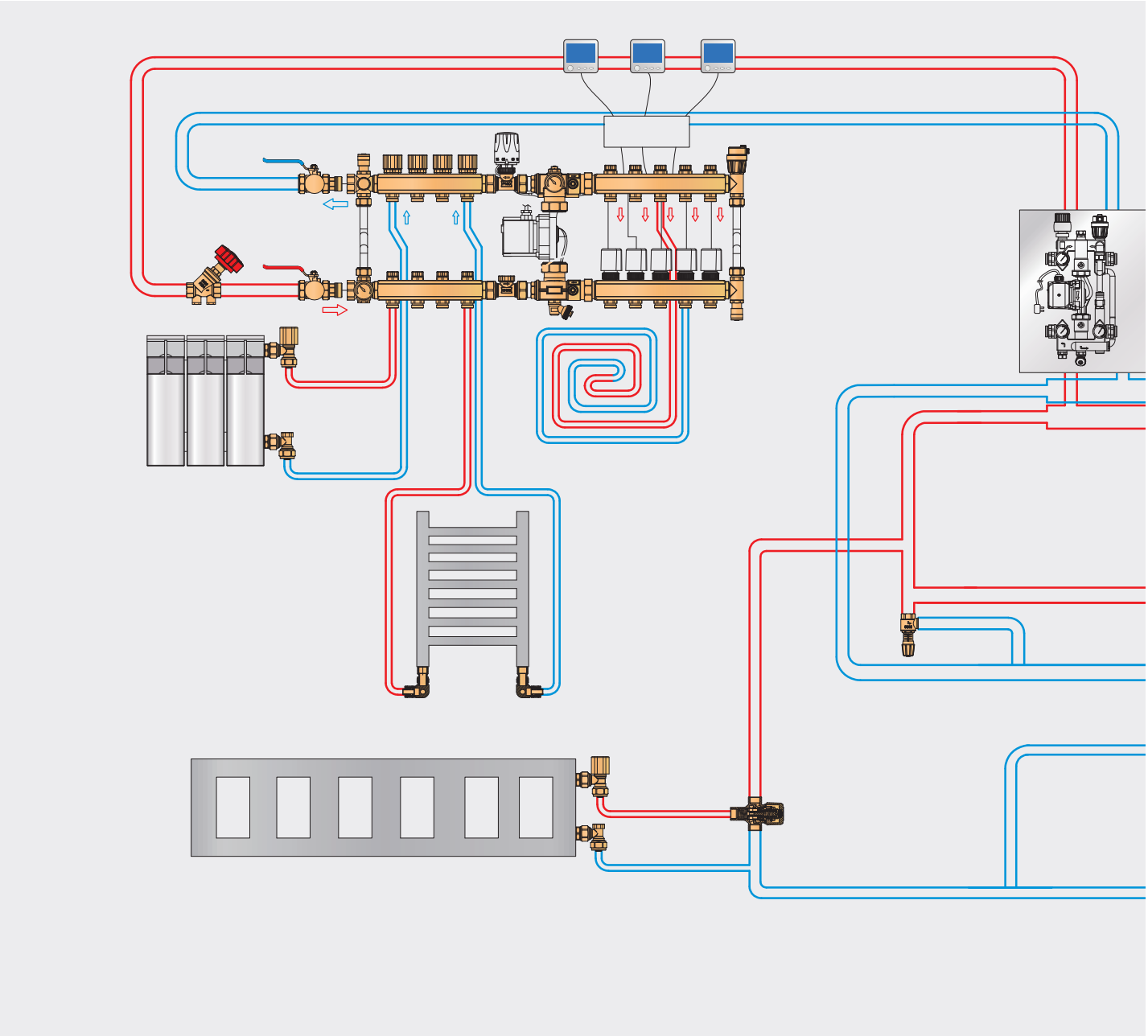

Technical characteristics

Manifolds

Material: SS /Brass

Operating pressure: ≤16 bar

Temperature range: ≤90°C

Actutor connection thread: M30x1.5

Diamter of Subordinate tube: 16/20

Pump Station

Material: Brass

Operating pressure: ≤16bar

Working temerpature: ≤110°C

Pump connection thread: Upper G1, Lower G11/2

Nozzle spacing: 125mm

Thermometer range: 0-120 °C

KV: 9.8 m^3/h

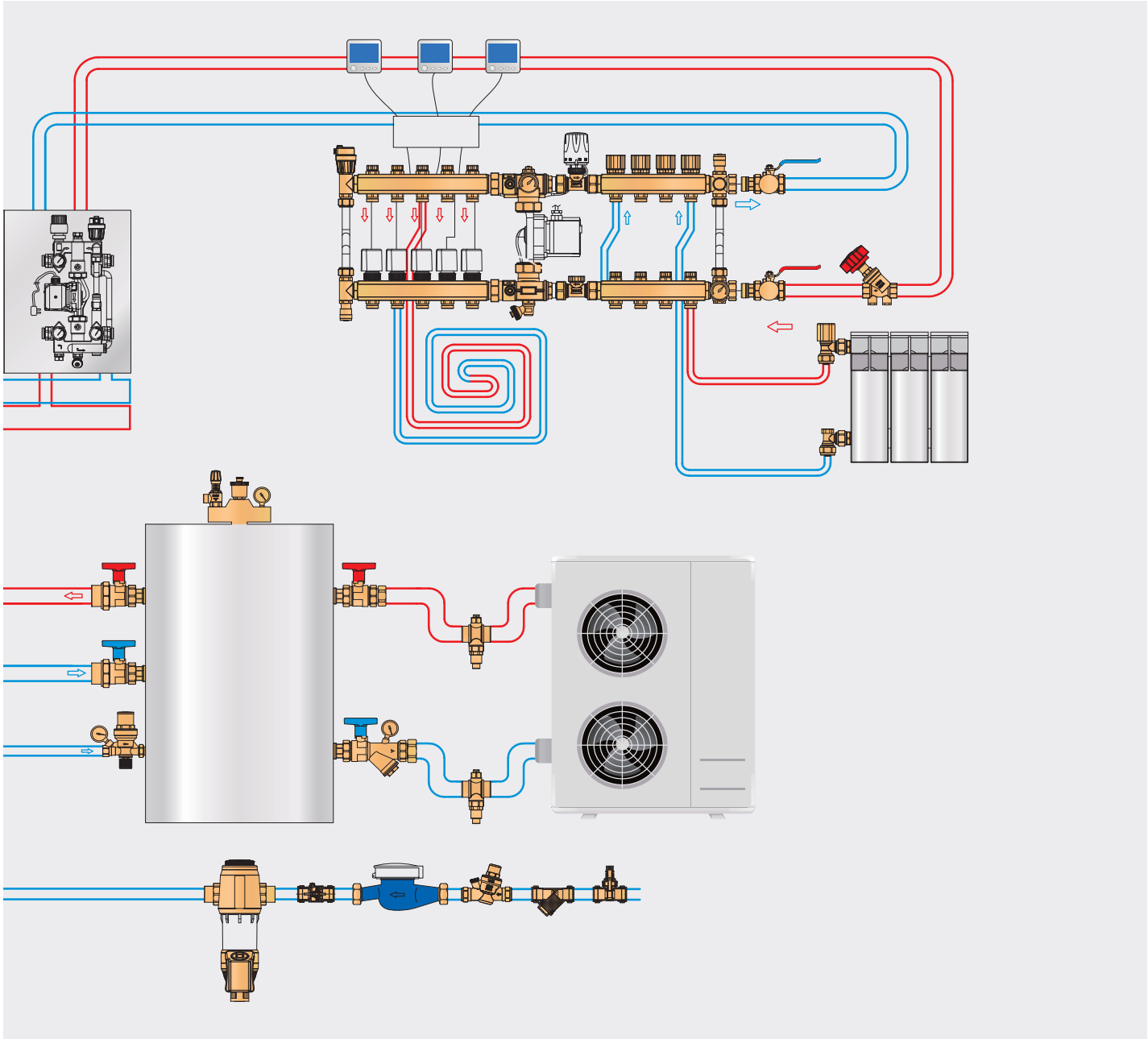

Catalogue

gate valve

HC-01016 & HC-01016A

DZR Brass Full Port Gate Valve ***PN16***

Feature & Benifits

- Europe DZR Brass 12164 CW602N Dezincification Resistant Brass prevents corrosion and fungal growth
- Non-rising stem design to minimise installation height
- Full bore design to ensure minimal pressure drop
- Adjustable gland packing for ease of maintenance
- Valves are Tested in Accordance with BS EN 12288 PN16 Series B

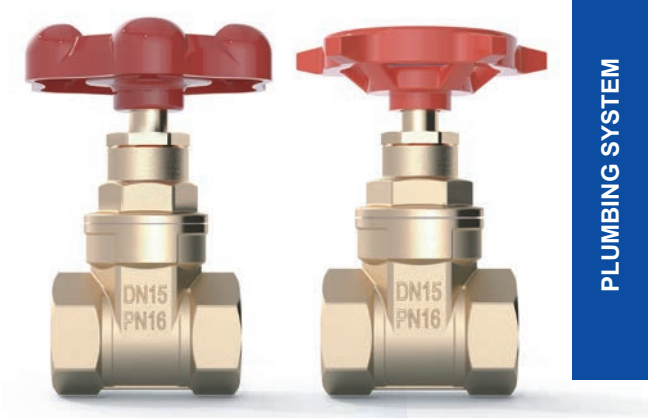

HC-01016 **HC-01016A**

Test Pressure & Temperature

Tempreture	Hydraulic
-20°C to 120°C	Shell: 24bar
	Seat: 17.6bar

Connection Standard

- UK END CONNECTION:Taper threaded to BS EN10226-2(ISO7-1) formerly BS 21
- ISO 228-1 parallel thread
- Medium: Water

Materials

NO.	PART	Materials
1	Body	DZR Brass CW602N
2	Gate	Brass
3	Washer	PTFE
4	Cap	DZR Brass CW602N
5	O-ring	EPDM
6	Stem	Brass
7	Washer	Brass
8	Packing	PTFE
9	Lock Cap	Brass
10	Hand wheel	Cast Iron / Alumium
11	Name plate	Alumium
12	Screw	SS 304

Dimensional Drawing

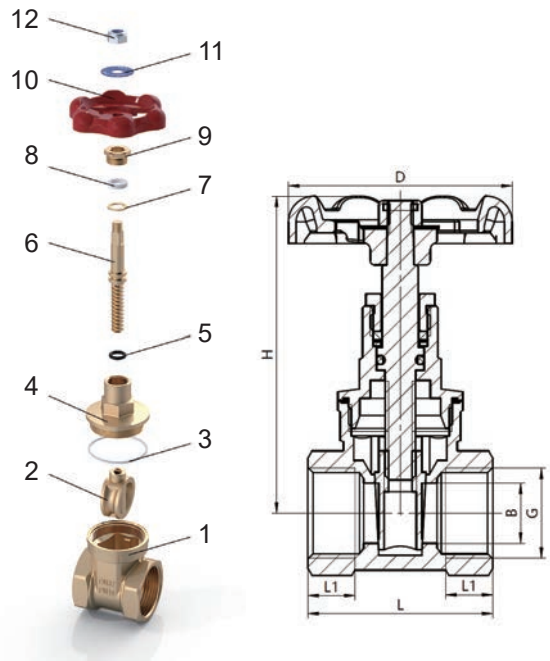

Dimensions

SIZE (inch)	L (mm)	L1 (mm)	H (mm)	B	D (mm)
1/2"	43	11	74	Φ14	Φ52
3/4"	46	11	82	Φ18	Φ52
1"	53	14	92	Φ23	Φ56
1-1/4"	56	14	103	Φ27	Φ72
1-1/2"	60	15	120	Φ33	Φ72
2"	70	18	139	Φ43	Φ78

Pressure & temperature ratings

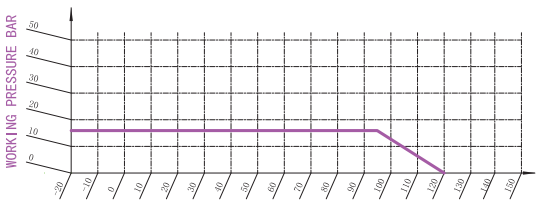

HC-10502 & HC-30502

Brass Full Port Gate Valve **PN20**

Feature & Benifits

- WRAS Certified
- Europe Brass CW617N
- Non-rising stem design to minimise installation height
- Full bore design to ensure minimal pressure drop
- Adjustable gland packing for ease of maintenance
- Valves are Tested in Accordance with BS EN 12288 PN20 Series B

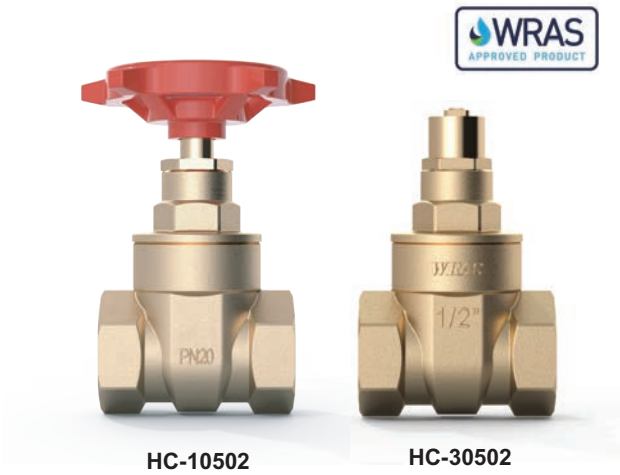

HC-10502 HC-30502

Test Pressure & Temperature

Tempreture	Hydraulic
-20°C to 120°C	Shell: 30 bar
	Seat: 22 bar

Connection Standard

- UK END CONNECTION:Taper threaded to BS EN10226-2(ISO7-1) formerly BS 21
- ISO 228-1 parallel thread
- Medium: Water

Materials

NO.	PART	Materials
1	Nut	Brass
2	Nameplate	Aluminum
3	Hand Wheel	Aluminum
4	Pressure Cap	Brass
5	Lead Screw	Brass
6	O-ring	EPDM
7	Cap	Brass CW617N
8	Gate	Brass
9	Valve Body	Brass CW617N

Dimensional Drawing

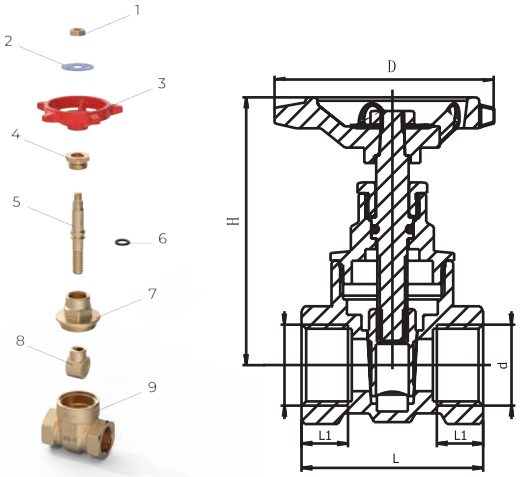

Dimensions

SIZE (inch)	L (mm)	L1 (mm)	H (mm)	d (mm)	D (mm)
1/2"	47	12	69.30	Φ13	Φ61
3/4"	50	14.5	79	Φ19	Φ61
1"	56.3	15	93.8	Φ23	Φ64
1-1/4"	63	18	115	Φ32	Φ81
1-1/2"	68	18	128	Φ39	Φ96
2"	80	20	158	Φ48	Φ103

Pressure & temperature ratings

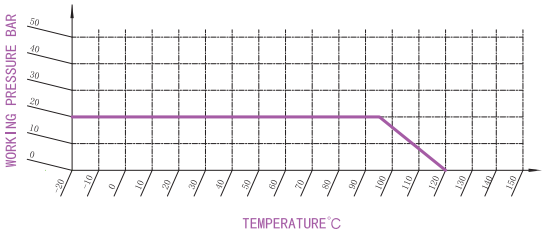

HC-41001&HC-41011

Lead Free Brass Full Port Gate Valve **200 PSI**

HC-41011

HC-41001

Product will have LF imprinted on the body for Lead Free

Feature & Benifits

- UPC & NSF Certified
- Lead Free Brass , complies with 0.25% weighted average lead content on wetted surfaces in accordance with the Safe Drinking WaterAct (SDWA)/
- Federal Public Law No. 111-380.
- Non- rising stem design to minimise installation height
- Full bore design to ensure minimal pressure drop
- Adjustable gland packing for ease of maintenance
- Valves are Tested in Accordance with MSS-SP-80

Test Pressure & Tempreture

Tempreture	Hydraulic
-20°C to 120°C	Shell: 300 PSI
	Seat: 200 PSI

Connection Standard

- US END CONNECTION: ANSI B1.20.1
- Solder Ends Conforms to ANSI Standards B16.18
- Medium: Water

Materials

NO.	PART	Materials
1	Body	Brass C46500
2	Gate	Brass C46500
3	Stem	Brass
4	Gasket	PTFE
5	Bonnet	Brass C46500
6	Stem nut	Brass
7	O-Ring	EPDM
8	Gland nut	Brass
9	Handwheel	Cast Iron
10	Name plate	Aluminum
11	Nut	Brass

Dimensional Drawing

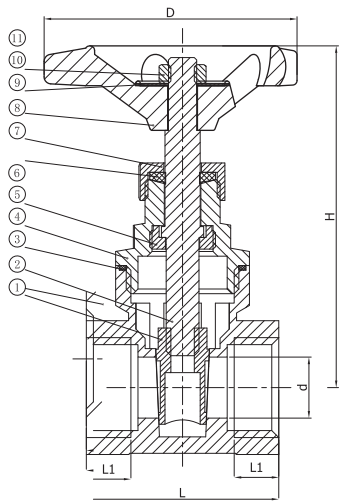

Dimensions

SIZE (inch)	L (mm)	L1 (mm)	H (mm)	d (mm)	D (mm)
1/2"	41	10	73	Φ13	Φ58
3/4"	45	11	75	Φ16	Φ58
1"	50	13	85	Φ20	Φ69
1-1/4"	54	14	98	Φ25	Φ80
1-1/2"	58	14	108	Φ32	Φ80
2"	64	17	125	Φ43	Φ86

Pressure & temperature ratings

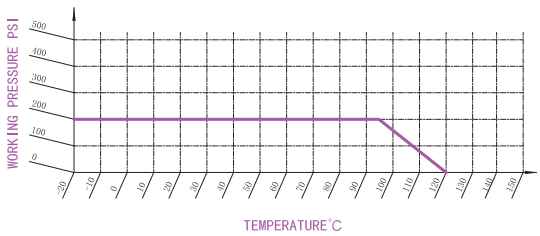

HC-06061A&HC-06061LS

Bronze Full Port Gate Valve **PN 25**

Feature & Benifits

- WRAS Certified
- Robust and high quality bronze body with integral seating surfaces.
- Non-rising stem design to minimise installation height
- Full bore design to ensure minimal pressure drop
- Adjustable gland packing for ease of maintenance
- Valves are Tested in Accordance with MSS-SP-80
- Iron handle can be available of Item No. HC-06061

HC-06061A HC-06061LS

Test Pressure & Tempreture

Tempreture	Hydraulic
-20°C to 120°C	Shell: 37.5 bar
	Seat: 27.5 bar

Connection Standard

- UK END CONNECTION:Taper threaded to BS EN10226-2(ISO7-1)formerly BS 21
- ISO228-1 parallel thread
- US END CONNECTION: ANSI B1.20.1
- Medium: Water

Material

NO.	Part	Material
1	Body	Bronze C83600
2	Bonnet	Bronze C83600
3	Stem	CW602N
4	Gate	Bronze C83600
5	Flat Gasket	PTFE
6	Adjustable Nut	CW602N
7	O ring	EPDM
8	Nut	Brass CW617N
9	Brass Ring	Brass CW617N
10	Gland	PTFE
11	Handlewheel	AL
12	Name Plate	AL
13	Handle Nut	304 SS

Dimensional Drawing

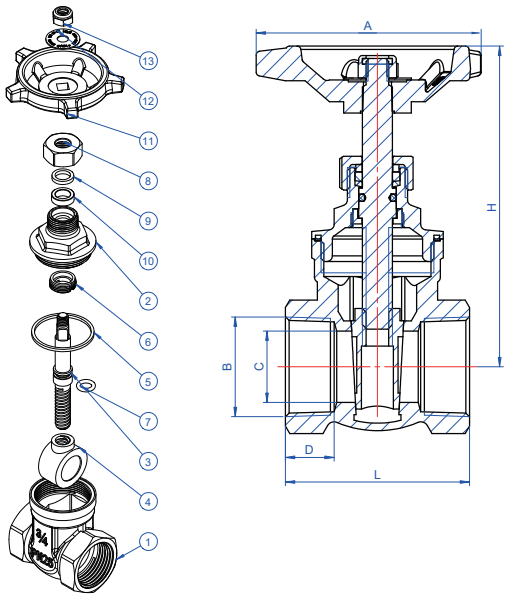

Dimensions

SIZE (inch)	A (mm)	B	C	D (mm)	L (mm)	H (mm)
1/2"	61	Rc1/2"	Φ14	13	45	74
3/4"	65	Rc3/4"	Φ19	13	49	85
1"	65	Rc1"	Φ24	16	56	93
1-1/4"	82	Rc11/4"	Φ30	17	61	116
1-1/2"	82	Rc11/2"	Φ34	17	62	124
2"	104	Rc2"	Φ47	20	71	150

Pressure & temperature ratings

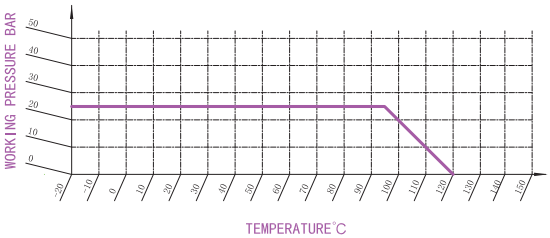

HC-06281A & HC-06281LS

Bronze Full Port Gate Valve **PN 20**

Feature & Benifits

- Robust and high quality bronze body with integral seating surfaces.
- Non-rising stem design to minimise installation height
- Full bore design to ensure minimal pressure drop
- Adjustable gland packing for ease of maintenance
- Valves are Tested in Accordance with MSS-SP-80
- Cast Iron handle can be available of Item No. HC-06281

HC-06281A **HC-06281LS**

Test Pressure & Temperature

Tempreture	Hydraulic
-20°C to 120°C	Shell: 30 bar
	Seat: 22 bar

Connection Standard

- UK END CONNECTION:Taper threaded to BS EN10226-2(ISO7-1)formerly BS 21
- ISO228-1 parallel thread
- US END CONNECTION: ANSI B1.20.1
- Medium: Water

Material

NO.	Part	Material
1	Body	Bronze C83600
2	Gate	Bronze C83600
3	Seal Ring	PTFE
4	Bonnet	Brass
5	Lock Cap	Brass
6	Adjustable Nut	Brass
7	Handlewheel	Aluminum
8	Nut	Q235
9	Name Plate	Aluminum
10	Stem	Brass
11	Washer	Brass
12	Packing	PTFE

Dimensional Drawing

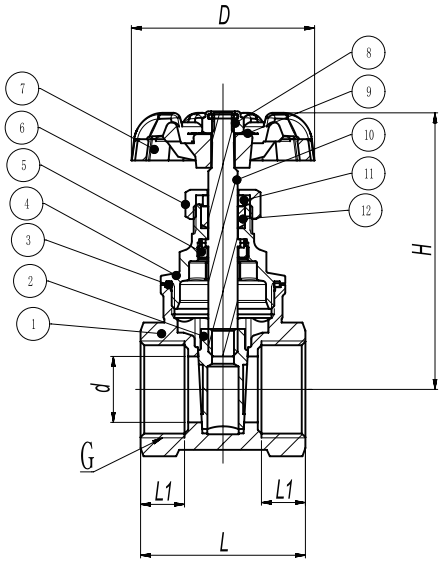

Dimensions

SIZE (inch)	L (mm)	L1 (mm)	H (mm)	d (mm)	D (mm)
1/2"	43	12	67	13	50
3/4"	45	12	76	18	50
1"	53	14	82	20	55
1-1/4"	55	14	104	28	67
1-1/2"	60	14	112	35	67
2"	64	16	131	42	90

Pressure & temperature ratings

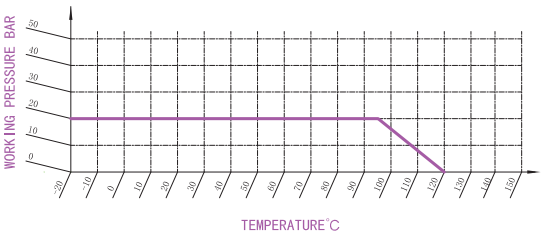

HC-85001

Resilient Gate Valve-Brass Nut Type ***PN10/PN16/CL125/CL150***

Feature & Benifits

- Ductile Iron with integral flanges
- Manufactured in accordance with BS EN 1171: 2002
- Stainless steel stem
- Non -rising
- ductile iron body
- Valves are Tested in Accordance with MSS SP-70 Class 125 and BS5150 ANSI 125.
- Non- Metal parts WRAS approved

Test Pressure & Tempreture

Tempreture	Hydraulic
-10°C to 180°C	Shell: 24 bar
	Seat: 17.6 bar

Connection Standard

- Design: EN1171, EN1074-2
- Face to face: EN558, ASME B16.10,AS2638
- End flange: EN1092-2, ASME B16.1/16.42,AS4087
- Tests: EN12266

Material

NO.	Part Name	Material	Standard
1	Body	Ductile iron	DIN1693/BSEN1563
2	Disc	DI+EPDM	DIN1693
3	Bonnet Gasket	NBR	ISO4633
4	Stem	X20Cr13/SS420	EN10088-1/ASTMA959
5	U Ring	EPDM	ISO4633
6	Holding Ring	CuZn39Pb1	EN12167
7	Handwheel	Ductile Iron	DIN1693/BSEN1563
8	Bolts	C45E/1045	EN10083-2/ASTM A29
9	Washers	C45E/1045	EN10083-2/ASTM A29
10	O Ring	NBR	ISO4633
11	O Ring	NBR	ISO4633
12	Thrust Nut	CuZn39Pb1	EN12167
13	Thrust Washer	POM	ISO9988-1
14	Bonnet	Ductile Iron	DIN1693/BSEN1563
15	Stem Nut	CuZn39Pb1	EN12167

Dimensional Drawing

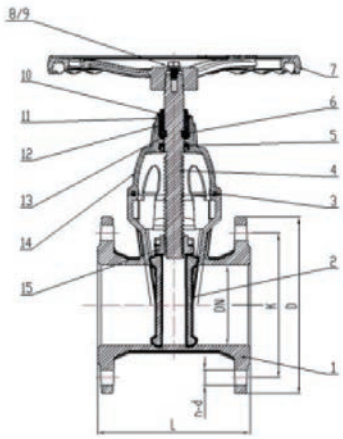

Dimensions

DN	OUTLINE mm					END FLANGE PN10/PN16-CL125/150 mm								
	BS 5163	DIN -F4	DIN -F5	ASME B16.10	AS 2638	EN1092-2			ASME B16.1/B16.42			AS4087		
	L					D	K	n-d	D	K	n-d	D	K	n-d
40	165	140	240	-	-	150	110	4-Φ19	127	98.5	4-Φ16	-	-	-
50	178	150	250	178	-	165	125	4-Φ19	152	120.5	4-Φ19	-	-	-
65	190	170	270	190	-	185	145	4-Φ19	178	139.5	4-Φ19	-	-	-
80	203	180	280	203	203	200	160	8-Φ19	191	152.5	4-Φ19	185	146	4-Φ18
100	229	190	300	229	229	220	180	8-Φ19	229	190.5	8-Φ19	215	178	8-Φ18
125	254	200	325	254	-	250	210	8-Φ19	254	216	8-Φ22	-	-	-
150	267	210	350	267	267	285	240	8-Φ23	279	241.5	8-Φ22	280	235	8-Φ18
200	292	230	400	292	292	340	295	8-Φ23/12-Φ23	343	298.5	8-Φ22	335	292	8-Φ18
250	330	250	450	330	330	395/405	350/355	12-Φ23/12-Φ28	406	362	12-Φ25	405	356	8-Φ22
300	356	270	500	356	356	445/460	400/410	12-Φ23/12-Φ28	483	432	12-Φ25	455	406	12-Φ22

HC-95001

Resilient Gate Valve-Gland Type ***PN10/PN16/CL125/CL150***

Feature & Benifits

- Ductile Iron with integral flanges
- Manufactured in accordance with BS EN 1171: 2002
- Stainless steel stem
- Non -rising
- ductile iron body
- Valves are Tested in Accordance with MSS SP-70 Class 125 and BS5150 ANSI 125.
- Non- Metal parts WRAS approved

Test Pressure & Tempreture

Tempreture	Hydraulic
-10°C to 180°C	Shell: 24 bar
	Seat: 17.6 bar

Connection Standard

- Design: EN1171, EN1074-2
- Face to face: EN558, ASME B16.10,AS2638
- End flange: EN1092-2, ASME B16.1/16.42,AS4087
- Tests: EN12266

Material

NO.	Part Name	Material	Standard
1	Body	Ductile iron	DIN1693/BSEN1563
2	Disc	DI+EPDM	DIN1693
3	Stem Nut	CuZn39Pb1	EN12167
4	Bonnet Gasket	NBR	ISO4633
5	Stem	X20Cr13/SS420	EN10088-1/ASTM A959
6	Bonnet	Ductile Iron	DIN1693/BSEN1563
7	Holding Ring	CuZn39Pb1	EN12167
8	Disc	NBR	ISO4633
9	Gland	Ductile Iron	DIN1693/BSEN1563
10	Handwheel	Ductile Iron	DIN1693/BSEN1563
11	Bolts	C45E/1045	EN10088-2/ASTM A29
12	Dust Ring	NBR	ISO 4633
13	O Ring	NBR	ISO 4633
14	Washer	Nylon 66	
15	U Ring	EPDM	ISO 4633
16	Screw	C45E/1045	EN10083-2/ASTM A29

Dimensional Drawing

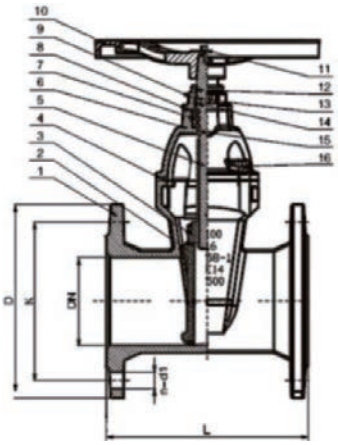

Dimensions

DN	OUTLINE mm					END FLANGE PN10/PN16-CL125/150 mm								
	BS 5163	DIN -F4	DIN -F5	ASME B16.10	AS 2638	EN1092-2			ASME B16.1/B16.42			AS4087		
	L					D	K	n-d	D	K	n-d	D	K	n-d
40	165	140	240	-	-	150	110	4-Φ19	127	98.5	4-Φ16	-	-	-
50	178	150	250	178	-	165	125	4-Φ19	152	120.5	4-Φ19	-	-	-
65	190	170	270	190	-	185	145	4-Φ19	178	139.5	4-Φ19	-	-	-
80	203	180	280	203	203	200	160	8-Φ19	191	152.5	4-Φ19	185	146	4-Φ18
100	229	190	300	229	229	220	180	8-Φ19	229	190.5	8-Φ19	215	178	8-Φ18
125	254	200	325	254	-	250	210	8-Φ19	254	216	8-Φ22	-	-	-
150	267	210	350	267	267	285	240	8-Φ23	279	241.5	8-Φ22	280	235	8-Φ18
200	292	230	400	292	292	340	295	8-Φ23/12-Φ23	343	298.5	8-Φ22	335	292	8-Φ18
250	330	250	450	330	330	395/405	350/355	12-Φ23/12-Φ28	406	362	12-Φ25	405	356	8-Φ22
300	356	270	500	356	356	445/460	400/410	12-Φ23/12-Φ28	483	432	12-Φ25	455	406	12-Φ22

HC-95101

Resilient Gate Valve-New Type ***PN10/PN16/CL125/CL150***

Feature & Benifits

- Ductile Iron with integral flanges
- Manufactured in accordance with BS EN 1171: 2002
- Stainless steel stem
- Non -rising
- ductile iron body
- Valves are Tested in Accordance with MSS SP-70 Class 125 and BS5150 ANSI 125.
- Non- Metal parts WRAS approved

Test Pressure & Tempreture

Tempreture	Hydraulic
-10°C to 180°C	Shell: 24 bar
	Seat: 17.6 bar

Connection Standard

- Design: EN1171, EN1074-2
- Face to face: EN558, ASME B16.10,AS2638
- End flange: EN1092-2, ASME B16.1/16.42,AS4087
- Tests: EN12266

Material

NO.	Part Name	Material	Standard
1	Body	Ductile iron	DIN1693/BSEN1563
2	Disc	DI+EPDM	DIN1693
3	Bonnet Gasket	NBR	ISO4633
4	Stem	X20Cr13/SS420	EN10088-1/ASTM A959
5	O Ring	NBR	ISO4633
6	Locating Sleeve	CuZn39Pb1	EN12167
7	Handwheel	Ductile Iron	DIN1693/BSEN1563
8	Bolts	C45E/1045	EN10083-2/ASTM A29
9	Washers	C45E/1045	EN10083-2/ASTM A29
10	Dust Cover	ABS	ASTM D1457
11	Clip Spring	C45E/1045	EN10083-2/ASTM A29
12	Positioning Block	CuZn39Pb1	EN12167
13	O Ring	NBR	ISO4633
14	O Ring	NBR	ISO4633
15	Bonnet	Ductile Iron	DIN1693/BSEN1563
16	Screw	C45E/045	EN10083/ASTM A29
17	Stem Nut	CuZn39Pb1	EN12167

Dimensional Drawing

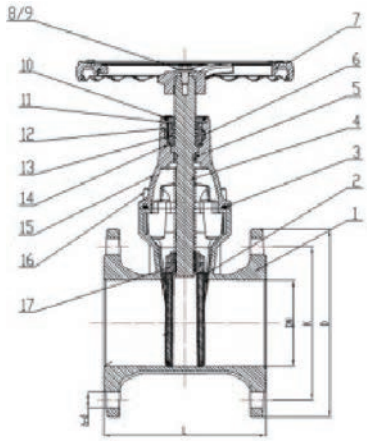

Dimensions

DN	OUTLINE mm					END FLANGE PN10/PN16-CL125/150 mm								
	BS 5163	DIN -F4	DIN -F5	ASME B16.10	AS 2638	EN1092-2			ASME B16.1/B16.42			AS4087		
	L					D	K	n-d	D	K	n-d	D	K	n-d
40	165	140	240	-	-	150	110	4-Φ19	127	98.5	4-Φ16	-	-	-
50	178	150	250	178	-	165	125	4-Φ19	152	120.5	4-Φ19	-	-	-
65	190	170	270	190	-	185	145	4-Φ19	178	139.5	4-Φ19	-	-	-
80	203	180	280	203	203	200	160	8-Φ19	191	152.5	4-Φ19	185	146	4-Φ18
100	229	190	300	229	229	220	180	8-Φ19	229	190.5	8-Φ19	215	178	8-Φ18
125	254	200	325	254	-	250	210	8-Φ19	254	216	8-Φ22	-	-	-
150	267	210	350	267	267	285	240	8-Φ23	279	241.5	8-Φ22	280	235	8-Φ18
200	292	230	400	292	292	340	295	8-Φ23/12-Φ28	343	298.5	8-Φ22	335	292	8-Φ18
250	330	250	450	330	330	395/405	350/355	12-Φ23/12-Φ28	406	362	12-Φ25	405	356	8-Φ22
300	356	270	500	356	356	445/460	400/410	12-Φ23/12-Φ28	483	432	12-Φ25	455	406	12-Φ22

HC-95201&HC-95301

Resilient Gate Valve **PN25**

Feature & Benifits

- Pressure: 2.5 Mpa
- Test pressure: Strength 2.75Mpa; Seal up 3.75Mpa
- Temperature: 0-80°C
- Medium: Water, Sewage, Air
- Drive form: Square Cap/Handwheel

HC-95201 HC-95301

Test Pressure & Tempreture

Tempreture	Hydraulic
0°C to 80°C	Shell: 37.5 bar
	Seat: 27.5 bar

Connection Standard

- Design: EN1171
- Flange: EN1092-2
- Face to face: EN558, ASME B16.10,AS2638
- Tests: EN12266-1

Material

NO.	Part Name	Material	Standard
1	Body	Ductile iron	DIN1693
2	Disc	DI+EPDM	DIN1693
3	Bonnet Gasket	NBR	ISO4633
4	Stem	SS420	ASTM A959
5	O Ring	NBR	ISO4633
6	Holding Ring	CuZn39Pb1	EN12167
7	Handwheel	Ductile Iron	DIN1693
8	Bolts	C45E/1045	EN10083-2/ASTM A29
9	Washers	C45E/1045	EN10083-2/ASTM A29
10	O Ring	NBR	ISO4633
11	O Ring	NBR	ISO4633
12	Thrust Nut	CuZn39Pb1	EN12167
13	Thrust Washer	POM	ISO9988-1
14	Bonnet	Ductile Iron	DIN1693
15	Stem Nut	CuZn39Pb1	EN12167
16	Square cap	Ductile iron	DIN1693

Dimensional Drawing

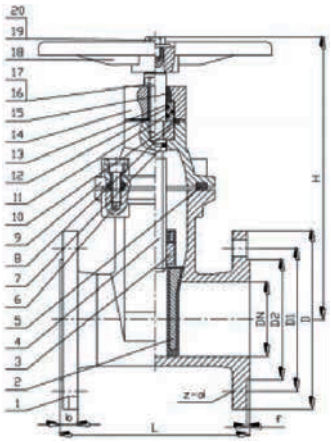

TYPE A: Gland Type

Dimensions

DN	D	D1	D2	L				H	b	f	z-d
				BS5163 L1	BS5163 L2	DIN-F4	DIN-F5				
50	165	125	99	178	216	150	250	253	19	3	4-Φ19
65	185	145	118	190	241	170	270	278	19	3	8-Φ19
80	200	160	132	203	283	180	280	308	19	3	8-Φ19
100	235	190	156	229	305	190	300	342	19	3	8-Φ23
125	270	220	184	254	381	200	325	395	19	3	8-Φ28
150	300	250	211	267	403	210	350	437	20	3	8-Φ28
200	360	310	274	292	419	230	400	523	22	3	12-Φ28
250	425	370	330	330	457	250	450	605	24.5	3	12-Φ31
300	485	430	389	356	502	270	500	688	27.5	4	16-Φ31

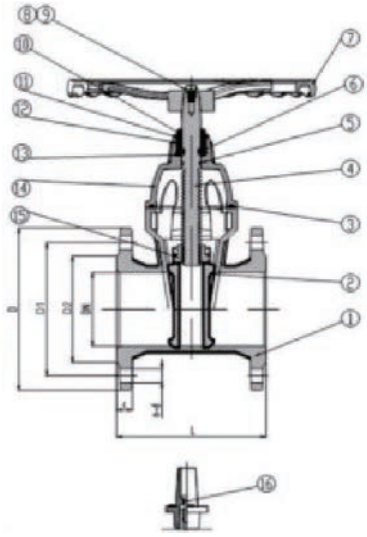

TYPE B: Brass Nut Type

HC-95401

Metal Seated Gate Valve ***PN10/PN16/CL125/CL150***

Feature & Benifits

- Ductile Iron with integral flanges
- Manufactured in accordance with BS EN 1171: 2002
- Stainless steel stem
- Non -rising
- ductile iron body
- Valves are Tested in Accordance with MSS SP-70 Class 125 and BS5150 ANSI 125.
- Non- Metal parts WRAS approved

Test Pressure & Tempreture

Tempreture	Hydraulic
-10°C to 180°C	Shell: 24 bar
	Seat: 17.6 bar

Connection Standard

- Design: EN1171, EN1074-2, AS2638
- Face to face: EN558, ASME B16.10,AS2638
- End flange: EN1092-2, ASME B16.1/16.42,AS4087
- Tests: EN12266

Material

NO.	Part Name	Material	Standard
1	Disc	Ductile iron	DIN1693/BSEN1563
2	Disc Ring	Brass	EN12167
3	Body Ring	Brass	EN12167
4	Body	Ductile Iron	DIN1693/BSEN1563
5	Stem Nut	CuZn39Pb1/C37000	EN12167/ASTM B135
6	Bonnet Gasket	NBR	ISO4633
7	Stem	X20Cr13/SS420	EN10088-1/ASTM A959
8	O Ring	NBR	ISO4633
9	O Ring	NBR	ISO4633
10	Sealing Shim	PVC-U	
11	Bolts	C45E/1045/A2	DIN1693/BS EN1563
12	Handwheel	Ductile Iron	DIN1693/BS EN1563
13	Stud	C45E/1045/A2	EN10083/ASTM A29
14	Stuffing Box	Ductile Iron	DIN1693/BS EN1563
15	Stuffing Gland	Ductile Iron	DIN1693/BS EN1563
16	O-Ring	NBR	ISO4633
17	Bonnet	Ductile Iron	DIN1693/BS EN1563
18	Bolts	C45E/1045/A2	EN10083/ASTM A29
19	Gasket	C45E/1045/A2	EN10083/ASTM A29
20	Nut	C45E/1045/A2	EN10083/ASTM A29

Dimensional Drawing

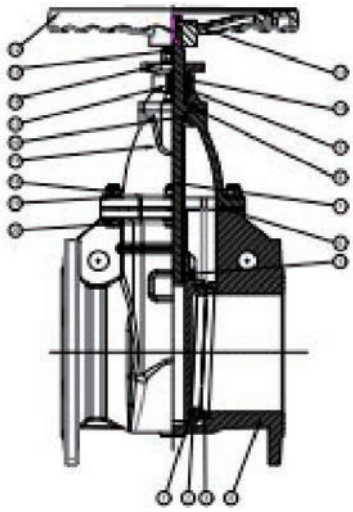

Dimensions

DN	OUTLINE mm					END FLANGE PN10/PN16-CL125/150 mm								
	BS 5163	DIN -F4	DIN -F5	ASME B16.10	AS 2638	EN1092-2			ASME B16.1/B16.42			AS4087		
	L					D	K	n-d	D	K	n-d	D	K	n-d
40	165	140	240	-	-	150	110	4-Φ19	127	98.5	4-Φ16	-	-	-
50	178	150	250	178	-	165	125	4-Φ19	152	120.5	4-Φ19	-	-	-
65	190	170	270	190	-	185	145	4-Φ19	178	139.5	4-Φ19	-	-	-
80	203	180	280	203	203	200	160	8-Φ19	191	152.5	4-Φ19	185	146	4-Φ18
100	229	190	300	229	229	220	180	8-Φ19	229	190.5	8-Φ19	215	178	4-Φ18
125	254	200	325	254	-	250	210	8-Φ19	254	216	8-Φ22	-	-	-
150	267	210	350	267	267	285	240	8-Φ23	279	241.5	8-Φ22	280	235	8-Φ18
200	292	230	400	292	292	340	295	8-Φ25/12-Φ28	343	298.5	8-Φ22	335	292	8-Φ18
250	330	250	450	330	330	395/405	350/355	12-Φ25/12-Φ28	406	362	12-Φ25	405	356	8-Φ22
300	356	270	500	356	356	445/460	400/410	12-Φ25/12-Φ28	483	432	12-Φ25	455	406	12-Φ22
350	381	290	550	381	381	505/520	460/470	16-Φ23/16-Φ28	533	476	12-Φ28	525	470	12-Φ26
400	406	310	600	406	406	565/580	515/525	16-Φ28/16-Φ31	597	540	12-Φ32	580	521	12-Φ26
450	432	330	650	432	432	615/640	565/585	20-Φ28/20-Φ31	635	578	16-Φ32	640	584	12-Φ26
500	457	350	700	457	457	670/715	670/650	20-Φ28/20-Φ34	699	635	20-Φ32	705	641	16-Φ26
600	508	390	800	508	508	780/840	725/770	20-Φ31/20-Φ37	813	749	20-Φ35	825	756	16-Φ30

ball valve

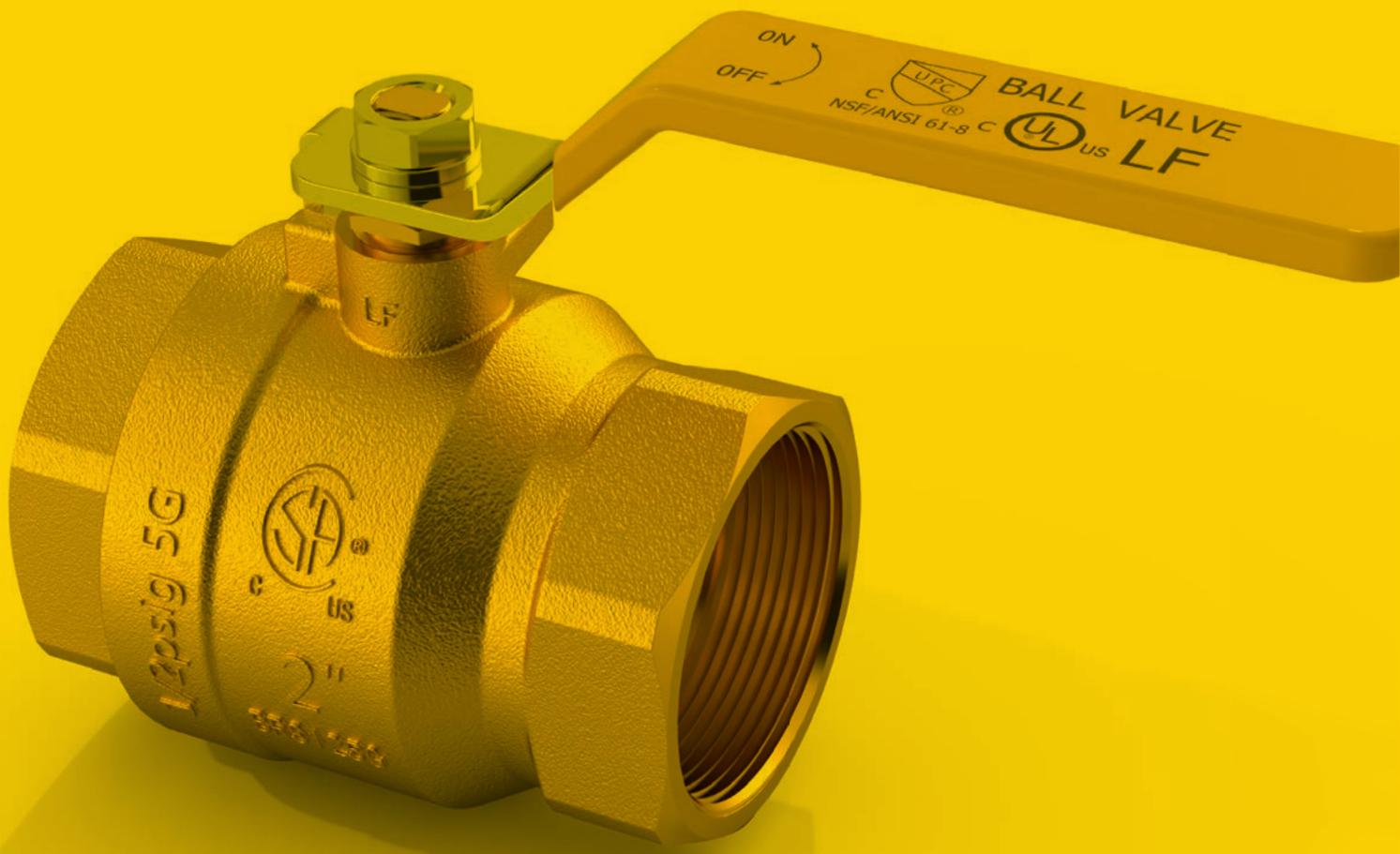

HC-99561

Lever Handle Ball Valve **PN25**

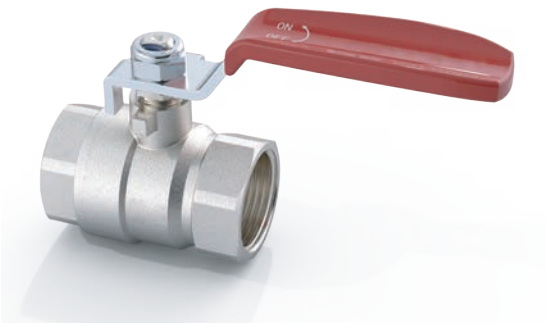

Feature & Benifits

- Brass material are made of brass grade CW617N as per the European standard EN12165.
- Designed to be light, compact and easy to install and operate
- Steel lever handle with anti-corrosion treatment and Blue PVC coating

Test Pressure & Temperature

Tempreture	Hydraulic
-20°C to 120°C	Shell: 37.5 bar
	Seat: 27.5 bar

Materials

NO.	PART	Materials
1	Nut	Steel
2	Lever handle	Steel
3	Stem	Brass
4	O-ring	NBR
5	Body	Brass
6	Seats	PTFE
7	Ball	Brass
8	Bonnet	Brass

Connection Standard

- ISO228-1 parallel thread
- Medium: Water

Dimensional Drawing

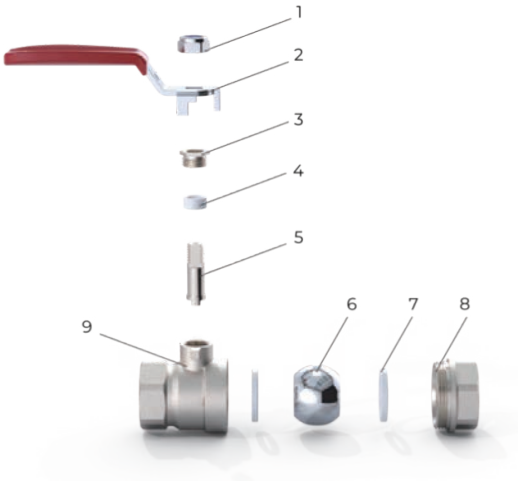

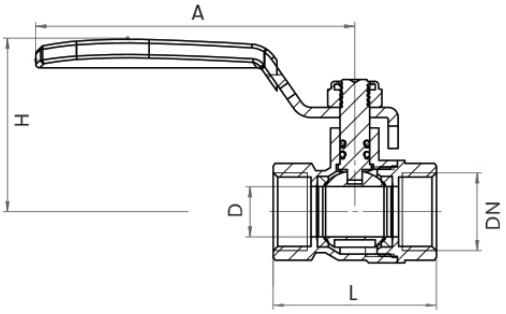

Dimensions

SIZE (inch)	L (mm)	A (mm)	H (mm)	D (mm)	G
1/2"	44	86	47	14	G1/2"
3/4"	51	86	50	18	G3/4"
1"	61	112	61	23	G1"
1-1/4"	74	135	74	30	G11/4"
1-1/2"	85	135	85	34	G11/2"
2"	98	135	98	43	G2"
2-1/2"	125	227	109	57	G2-1/2"
3"	145	227	117	68	G3"
4"	168	236	130	85	G4"

Pressure & temperature ratings

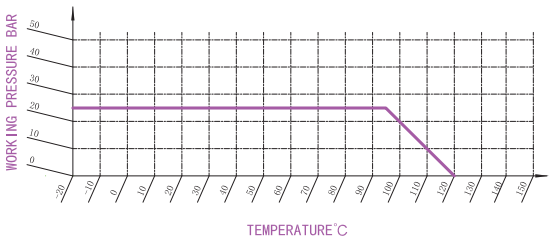

HC-89901

Brass Full Port Ball Valve **PN25**

Feature & Benifits

- Full port
- Europe DZR Brass 12164 CW602N Dezincification Resistant Brass prevents corrosion and fungal growth
- Designed to be light, compact and easy to install and operate
- Steel lever handle with anti-corrosion treatment and Blue PVC coating
- Valves are Tested in Accordance with BSEN 13828 standards

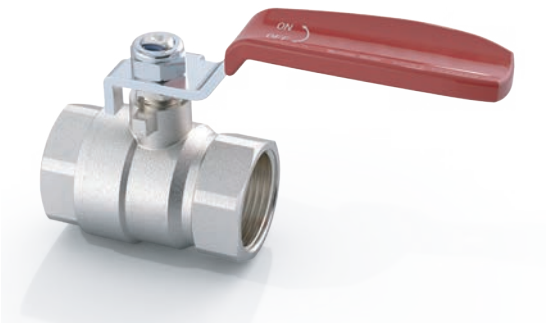

Test Pressure & Temperature

Tempreture	Hydraulic
-20°C to 120°C	Shell: 37.5 bar
	Seat: 27.5 bar

Connection Standard

- ISO228-1 parallel thread
- Medium: Water

Materials

NO.	PART	Materials
1	Nut	Steel
2	Lever handle	Steel
3	Oil seal bushing	Brass
4	Washer	PTFE
5	Stem Nickle plated	Brass
6	Ball Chrome plated	Brass
7	Seats	PTFE
8	Bonnet Nickle plated	Brass DZR
9	Body Nickle plated	Brass DZR

Dimensional Drawing

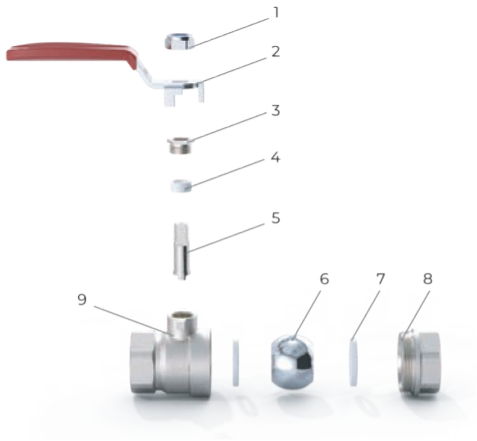

Dimensions

SIZE (inch)	L (mm)	L1 (mm)	H (mm)	d (mm)	D (mm)
1/2"	47.2	11.5	47.7	Φ25	Φ86
3/4"	56.4	13	52.2	Φ31	Φ86
1"	64	14	63.9	Φ37.5	Φ112
1-1/4"	77.4	15.5	72.1	Φ46.5	Φ140
1-1/2"	86.2	16	78.9	Φ54	Φ140
2"	102	17	95	Φ67	Φ162

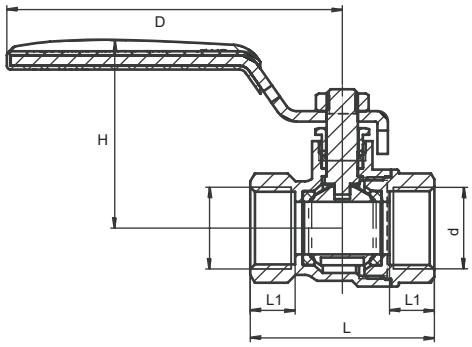

Pressure & temperature ratings

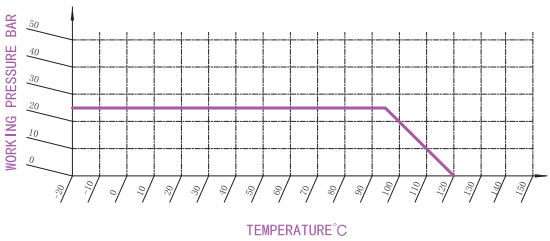

HC-88881

Brass Full Port Ball Valve **PN25**

Feature & Benifits

- WRAS Certified
- Europe Brass CW617N
- Full port
- Designed to be light, compact and easy to install and operate
- Steel lever handle with anti-corrosion treatment and Blue PVC coating
- Valves are Tested in Accordance with BSEN 13828 standards

Test Pressure & Temperature

Tempreture	Hydraulic
-20°C to 120°C	Shell: 37.5 bar
	Seat: 27.5 bar

Connection Standard

- ISO228-1 parallel thread
- Medium: Water

Materials

NO.	PART	Materials
1	Nut	Brass
2	Lever handle	Steel
3	Oil seal bushing	Brass
4	Seats	PTFE
5	Stem Nickle plated	Brass
6	Bonnet Nickle plated	Brass CW617N
7	Ball Chrome plated	Brass
8	Washer	PTFE
9	Body Nickle plated	Brass CW617N

Dimensional Drawing

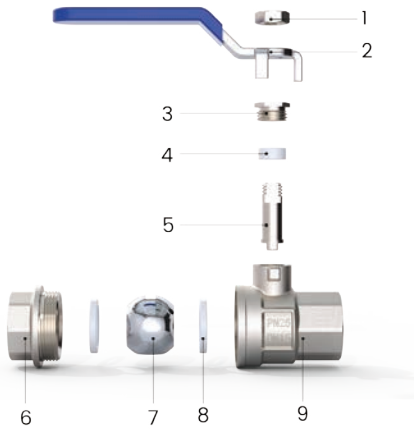

Dimensions

SIZE (inch)	L (mm)	L1 (mm)	H (mm)	d (mm)	D (mm)
1/2"	52	13	46.5	Φ25	Φ85
3/4"	60.4	13.5	52.4	Φ32	Φ85
1"	69	16	58	Φ38	Φ104
1-1/4"	83	17	72.9	Φ48	Φ123.5
1-1/2"	97	19.5	78.5	Φ55	Φ123.5
2"	110.2	20	93.7	Φ65	Φ155.8

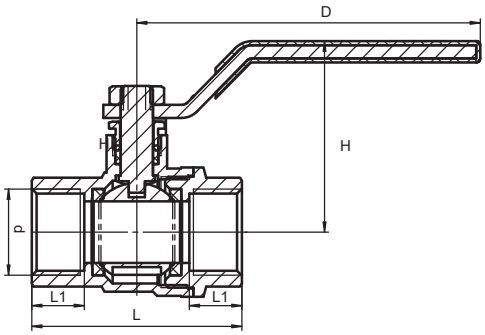

Pressure & temperature ratings

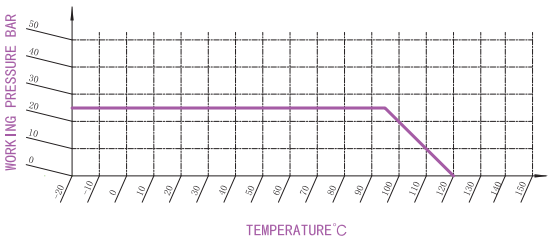

HC-88881T

Brass Full Port Ball Valve **PN25**

Feature & Benifits

- WRAS Certified
- Europe Brass CW617N
- Full port
- Designed to be light, compact and easy to install and operate
- Butterfly handle
- Valves are Tested in Accordance with BSEN 13828 standards

Test Pressure & Temperature

Tempreture	Hydraulic
-20°C to 120°C	Shell: 37.5 bar
	Seat: 27.5 bar

Materials

NO.	PART	Materials
1	Nut	Brass
2	Handle	Aluminum
3	Oil seal bushing	Brass
4	Seats	PTFE
5	Stem Nickle plated	Brass
6	Body Nickle plated	Brass CW617N
7	Washer	PTFE
8	Chrome plated Ball	Brass
9	Bonnet	Brass CW617N

Connection Standard

- ISO228-1 parallel thread
- Medium: Water

Dimensional Drawing

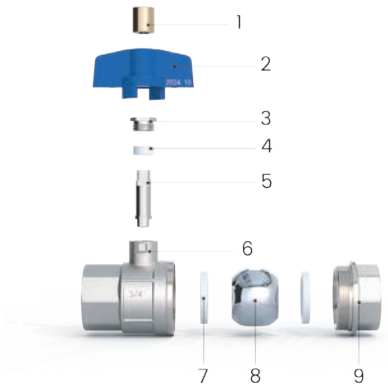

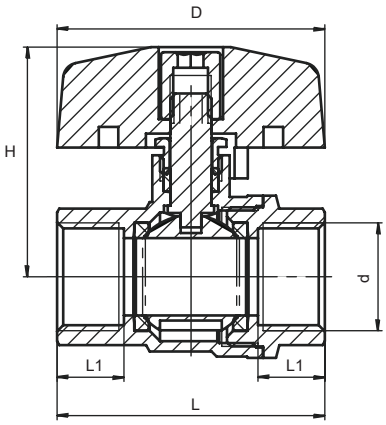

Dimensions

SIZE (inch)	L (mm)	L1 (mm)	H (mm)	d (mm)	D (mm)
1/4"	44.6	13	38.4	Φ8	Φ52
3/8"	44.6	11.2	40.2	Φ10	Φ52
1/2"	52	13	44.6	Φ15	Φ52
3/4"	60.4	13.5	50.5	Φ20	Φ52
1"	69	15	54	Φ25	Φ69

Pressure & temperature ratings

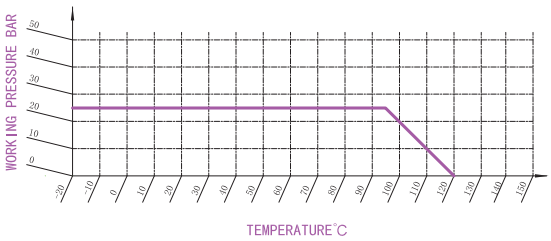

HC-88881MF

Brass Full Port Ball Valve **PN25**

Feature & Benifits

- WRAS Certified
- Europe Brass CW617N
- Full port
- Designed to be light, compact and easy to install and operate
- Steel lever handle with anti-corrosion treatment and Blue PVC coating
- Valves are Tested in Accordance with BSEN 13828 standards

Test Pressure & Temperature

Tempreture	Hydraulic
-20°C to 120°C	Shell: 37.5 bar
	Seat: 27.5 bar

Connection Standard

- ISO228-1 parallel thread
- Medium: Water

Materials

NO.	PART	Materials
1	Nut	Brass
2	Lever handle	Steel
3	Oil seal bushing	Brass
4	Seats	PTFE
5	Stem Nickle plated	Brass
6	Bonnet Nickle plated	Brass CW617N
7	Ball Chrome plated	Brass
8	Washer	PTFE
9	Body Nickle plated	Brass CW617N

Dimensional Drawing

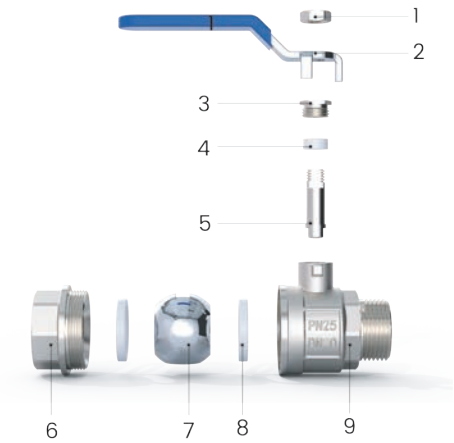

Dimensions

SIZE (inch)	A (mm)	B (mm)	B1 (mm)	C (mm)	D (mm)	H (mm)
1/2"	54	13	13	92	15	51.6
3/4"	61.4	13.5	13.5	92	20	57.5
1"	72	16	16	115.5	25	63.5
1 1/4"	85.5	17	17	129.5	32	72.9
1 1/2"	101.5	19.5	19.5	129.5	39.5	78.5
2"	119.7	20	20	156	50	93.9

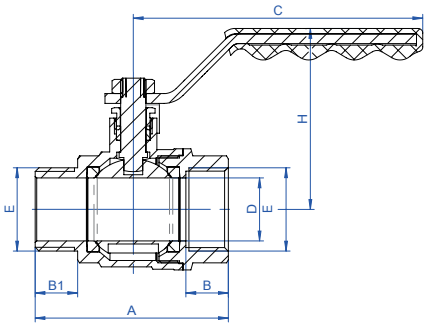

Pressure & temperature ratings

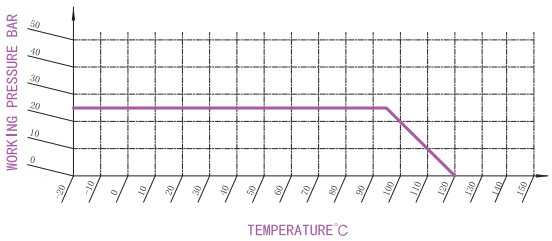

HC-88881MF T

Brass Full Port Ball Valve **PN25**

Feature & Benifits

- WRAS Certified
- Europe Brass CW617N
- Full port
- Designed to be light, compact and easy to install and operate
- Butterfly handle
- Valves are Tested in Accordance with BSEN 13828 standards

Test Pressure & Temperature

Tempreture	Hydraulic
-20°C to 120°C	Shell: 37.5 bar
	Seat: 27.5 bar

Materials

NO.	PART	Materials
1	Nut	Brass
2	Handle	Aluminum
3	Oil seal bushing	Brass
4	Seats	PTFE
5	Stem Nickle plated	Brass
6	Body Nickle plated	Brass CW617N
7	Washer	PTFE
8	Chrome plated Ball	Brass
9	Bonnet	Brass CW617N

Dimensions

SIZE (inch)	A (mm)	B (mm)	B1 (mm)	C (mm)	D (mm)	H (mm)
1/4"	48.1	13	10	52	8	38.4
3/8"	49.6	11.2	11.5	52	10	40.2
1/2"	54	13	13	52	15	44.6
3/4"	61.4	13.5	13.5	52	20	50.5
1"	72	16	16	69	25	54

Connection Standard

- ISO228-1 parallel thread
- Medium: Water

Dimensional Drawing

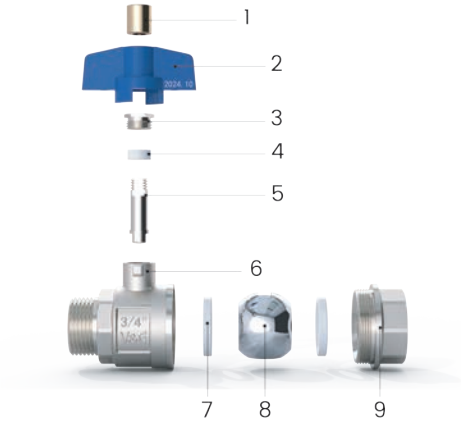

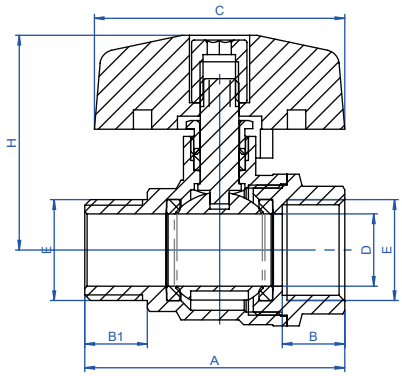

Pressure & temperature ratings

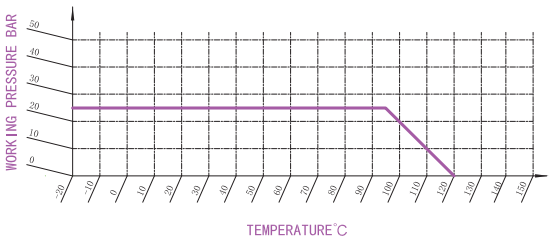

HC-88881 DC

Brass Full Port Ball Valve with Drain **PN25**

Feature & Benifits

- Europe Brass CW617N
- Full port
- Designed to be light, compact and easy to install and operate
- Steel lever handle with anti-corrosion treatment and Blue PVC coating
- Valves are Tested in Accordance with BSEN 13828 standards

Test Pressure & Temperature

Tempreture	Hydraulic
-20°C to 120°C	Shell: 37.5 bar
	Seat: 27.5 bar

Materials

NO.	PART	Materials
1	Nut	Brass
2	Handle	Steel
3	Oil seal bushing	Brass
4	Seats	PTFE
5	Stem Nickle plated	Brass
6	Body Nickle plated	Brass CW617N
7	Bonnet	Brass CW617N
8	Washer	PTFE
9	Chrome plated Ball	Brass
10	Exhaust Components	Brass CW617N

Dimensions

SIZE (inch)	L (mm)	L1 (mm)	H (mm)	d (mm)	D (mm)	F (mm)
1/2"	55.5	13	51.6	Φ15	Φ92	82.2
3/4"	63.6	13.5	57.5	Φ20	Φ92	90.2

Connection Standard

- ISO228-1 parallel thread
- Medium: Water

Dimensional Drawing

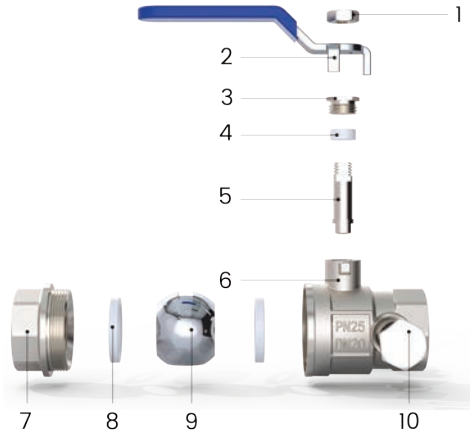

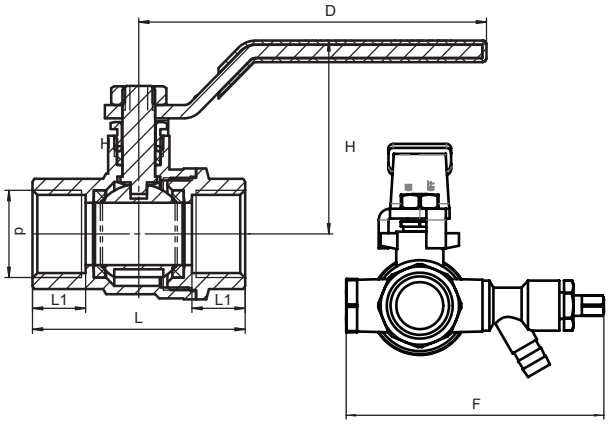

Pressure & temperature ratings

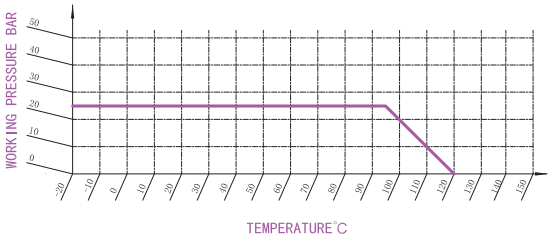

HC-15112&HC-30122

Lead Free Full Port Ball Valve **600PSI**

Feature & Benifits

- NSF , CSA , UPC Certified
- Lead Free Brass , complies with 0.25% weighted average lead content on wetted surfaces in accordance with the Safe Drinking WaterAct (SDWA)/ Federal Public Law No. 111-380.
- Conform to IGC 157
- Full port
- 1/4" to 2" : 600 PSI , 2 1/2" to 4" : 400 PSI
- 1/4" to 1" LF Brass Ball Chrome Plated , *1 1/4" -2" 304 Stainless Steel Ball
- Steel lever handle with anti-corrosion treatment and Blue PVC coating
- IPS : 1/4" to 2" certified CSA , NSF61 , NSF 372 , cUPC
- 2 1/2" to 4" certified NSF61 , NSF 372 , cUPC
- SWT : All certifed NSF61 , NSF 372 , cUPC
- Valves are Tested in Accordance with MSS-SP-110

HC-30122 HC-15112

Product will have LF imprinted on the body for Lead Free

Test Pressure & Tempreture

Tempreture	Hydraulic
-20°C to 120°C	Shell: 900PSI/600PSI
	Seat: 600PSI/400PSI

Connection Standard

- US END CONNECTION: ANSI B1.20.1
- Solder Ends Conforms to ANSI Standards B16.18
- Medium: Water , Oil , Steam

Materials

NO.	PART	Materials
1	Body	Brass C46500
2	Bonnet	Brass C46500
3	Sealing seat	PTFE
4	Ball	Brass C46500
5	Stem	Brass
6	Packing	PTFE
7	Adjustable nut	Brass
8	Handle	Q235
9	Nut	Q235

Dimensional Drawing

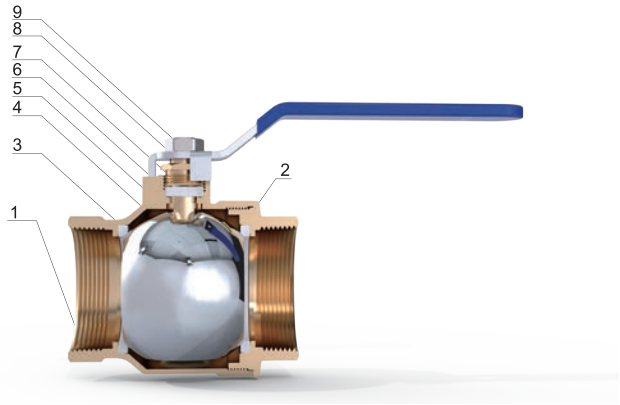

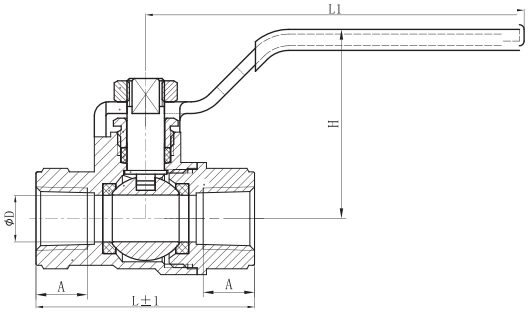

Dimensions

SIZE (inch)	D (mm)	L (mm)	L1 (mm)	H (mm)	A (mm)
1/4"	10	47	81	41	11
3/8"	10	47	81	41	11
1/2"	13	48	81	43	12
3/4"	19	60	104	54	13
1"	25	70	104	61	15
1-1/4"	32	83	136	75	17
1-1/2"	38	92	136	78	18
2"	50	110	165	89	19
2-1/2"	64	134	230	117	24
3"	79	158	230	123	25
4"	99	182	230	153	28

Pressure & temperature ratings

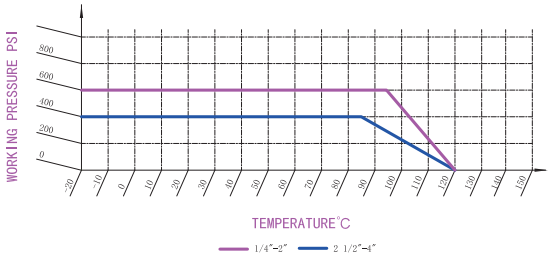

HC-80081

Bronze Full Port Ball Valve **PN40**

Feature & Benifits

- Robust and high quality bronze body with integral seating surfaces.
- Full port
- 1/2" to 4" : PN40
- Steel lever handle with anti-corrosion treatment and Blue PVC coating
- Light and compact for easy installation
- Valves are Tested in Accordance with MSS-SP-110

Test Pressure & Tempreture

Tempreture	Hydraulic
-20°C to 120°C	Shell: 60 bar
	Seat: 44 bar

Connection Standard

- US END CONNECTION: ANSI B1.20.1
- ISO228-1 parallel thread
- Medium: Water , Oil , Steam

Material

NO.	Part	Material
1	Body	Bronze CC491K
2	Seal	PTFE
3	Ball	Brass
4	Bonnet	Bronze CC491K
5	O-ring	EPDM
6	Packing Gland	PTFE
7	Stem	Brass
8	Gland Nut	Brass
9	Handle	Steel
10	Handle Nut	304 SS

Dimensional Drawing

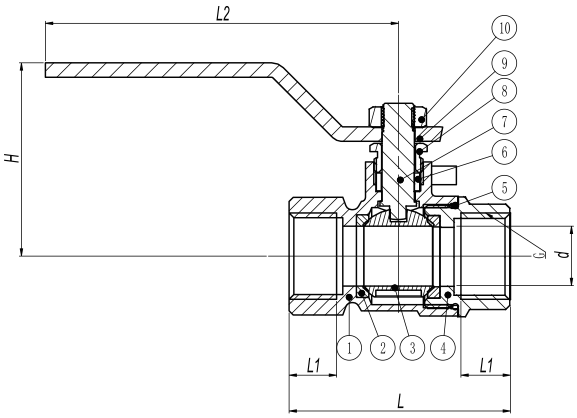

Dimensions

SIZE (inch)	D (mm)	L1 (mm)	H (mm)	L (mm)	A (mm)
1/2"	15	12	47	54	90
3/4"	20	11	55	59	100
1"	25	15	61	70	121
1-1/4"	30	13	68	77	121
1-1/2"	38	18	83	93	148
2"	50	17	95	109	145

Pressure & temperature ratings

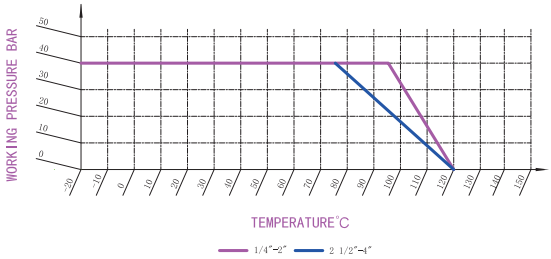

HC-20502

Brass Compression Ball Valve **PN25**

Feature & Benifits

- WRAS Certified
- Europe Brass CW617N
- Full port
- Designed to be light, compact and easy to install and operate
- Steel lever handle with anti-corrosion treatment and Blue PVC coating
- Valves are Tested in Accordance with BSEN 1254-2

Test Pressure & Tempreture

Tempreture	Hydraulic
-20°C to 120°C	Shell: 37.5bar
	Seat: 27.5bar

Connection Standard

- Compression version supplied with ends complying with BS EN 1254-2

Materials

NO.	PART	Materials
1	Body	Brass CW617N
2	Bonnet	Brass CW617N
3	Seat	PTFE
4	Ball	Brass
5	Stem	Brass
6	Packing	PTFE
7	Dland Nut	Brass
8	Handle	Iron
7	Screw	Iron
8	Olive	T2
8	Compression Nut	Brass

Dimensional Drawing

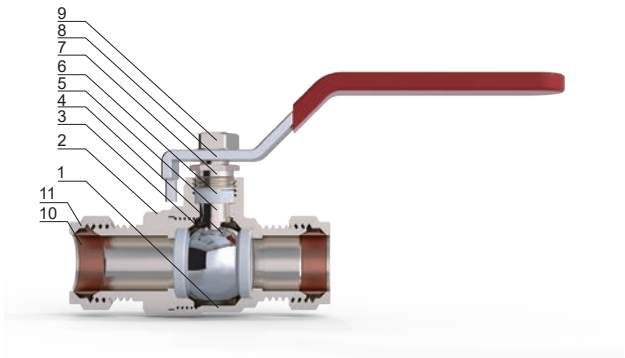

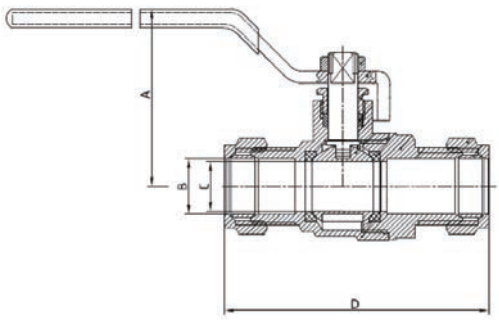

Dimensions

SIZE (inch)	A (mm)	B (mm)	C (mm)	D (mm)
15MM	52	15	14	72
22MM	52	22	19	83
28MM	58	28	23	86
35MM	75	35	32	107
42MM	76	42	38	113
54MM	90	54	49	127

Pressure & temperature ratings

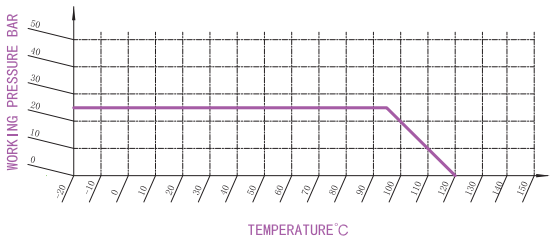

HC-20332

Brass Compression Ball Valve **PN16**

Feature & Benifits

- WRAS Certified
- Europe Brass CW617N
- Full port
- Designed to be light, compact and easy to install and operate
- Butterfly handle with anti-corrosion treatment and Blue PVC coating
- Valves are Tested in Accordance with BSEN 1254-2

Test Pressure & Tempreture

Tempreture	Hydraulic
-20°C to 120°C	Shell: 25 bar
	Seat: 17.6 bar

Connection Standard

- Compression version supplied with ends complying
- with BS EN 1254-2

Materials

NO.	PART	Materials
1	Body	Brass CW617N
2	Bonnet	Brass CW617N
3	Seat	PTFE
4	Ball	Brass
5	Stem	Brass
6	Gland	PTFE
7	Adjustable Nut	Brass
8	Handle	Aluminum
9	Nut	Brass
10	Ferrule	Cast Iron
11	Hexagonal Nut	Brass

Dimensional Drawing

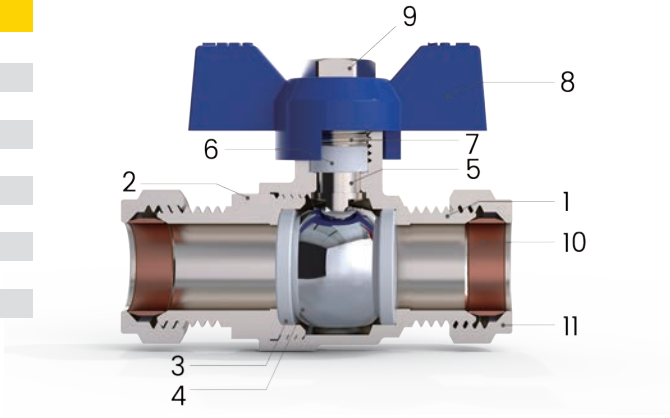

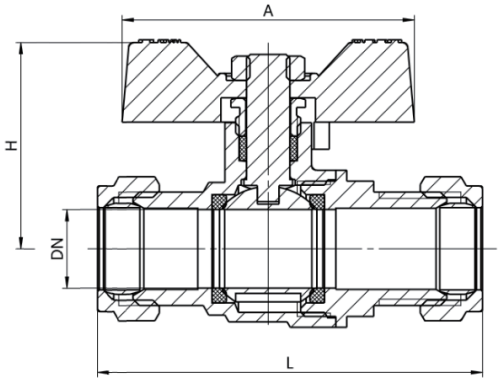

Dimensions

SIZE (inch)	H (mm)	DN (mm)	A (mm)	L (mm)
15mm	38	15	54	71
22mm	48	20	63	80
28mm	51	25	63	96

Pressure & temperature ratings

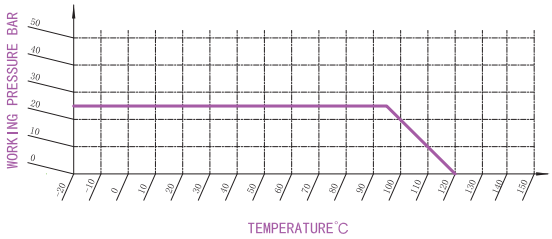

HC-16912

Brass Gas Ball valve

MOP5

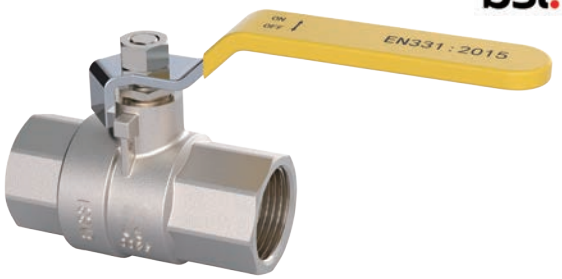

Feature & Benifits

- UKCA &BSI Certified
- Suitable for gases of the first, second and third family (EN 437)
- Full port
- Valve made of UNI EN 12165 CW617N nickel plated brass Stem with double sealing system
- Nut with anti-corrosion coating, with guarantee seal and hologram
- Steel lever handle with anti-corrosion treatment which can bear neutral salt spray test 144 hours and yellow PVC coating. The sealant is DVGW (EN-751-1) approved by German gas and water authority, which can improve the bending and torque resistance better and firmly.
- Double O Ring with EN549 certified NBR on the stem, double Security for sealing
- Valves are Tested in Accordance :EN 331:2015

Connection Standard

- UK END CONNECTION:Taper threaded to BS EN10226-2(ISO7-1)formerly BS 21
  Medium: Natural Gas

Test Pressure & Tempreture

Tempreture	Hydraulic
-20°C to 60°C	Seat: 7.5bar

Dimensional Drawing

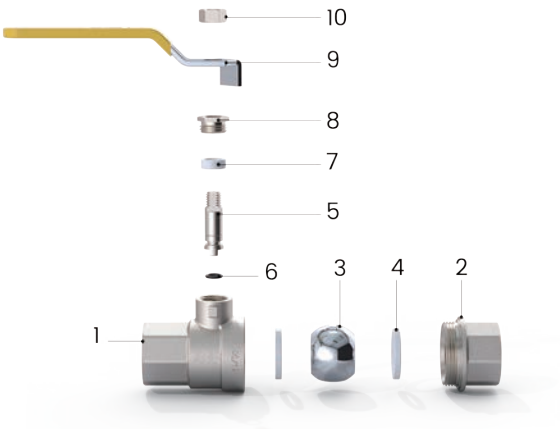

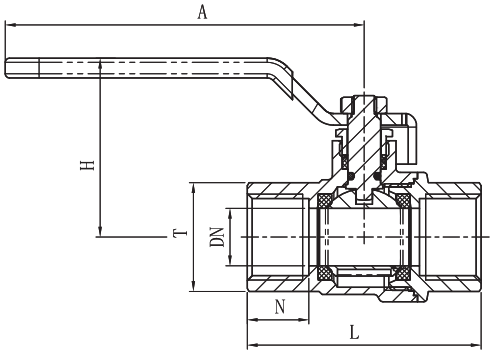

Materials

NO.	PART	Materials
1	Body	Brass CW617N
2	Bonnet	Brass CW617N
3	Ball	Brass
4	Seat	PTFE
5	Stem	Brass
6	O-Ring	NBR
7	Gland	Graphite
8	Adjustable Nut	Brass
9	Handle	Q235
10	Nut	Brass

Dimensions

SIZE (inch)	DN	N (mm)	L (mm)	H (mm)	A (mm)	T (mm)
1/2"	14	15	57	44	88	EN25
3/4"	19	21	72	53	104	EN31
1"	24	24	87	57	104	EN38
1-1/4"	29	24	93	67	131	EN48
1-1/2"	37	24	103	73	131	EN55
2"	46	26	117	87	160	EN68

HC-61011

Brass Gas Ball valve

MOP5

DVGW CERT GMBH

Feature & Benifits

- DVGW Certified
  Suitable for gases of the first, second and third family (EN 437)
- Full port
- Valve made of UNI EN 12165 CW617N nickel plated brass Stem with double sealing system
- Nut with anti-corrosion coating, with guarantee seal and hologram
- Steel lever handle with anti-corrosion treatment which can bear neutral salt spray test 144 hours and yellow PVC coating
- The sealant is DVGW (EN-751-1) approved by German gas and water
- authority, which can improve the bending and torque resistance better and firmly
- Double O Ring with EN549 certified NBR on the stem, double Security for sealing
- Valves are Tested in Accordance :EN 331:2015

Connection Standard

- UK END CONNECTION:Taper threaded to BS
- EN10226-2(ISO7-1)formerly BS 21
- Medium: Natural Gas

Test Pressure & Tempreture

Tempreture	Hydraulic
-20°C to 60°C	Seat: 7.5bar

Dimensional Drawing

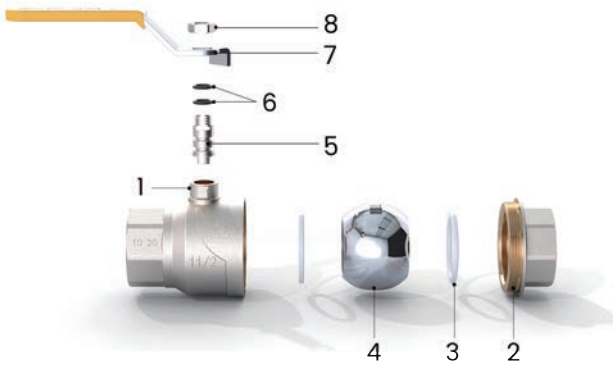

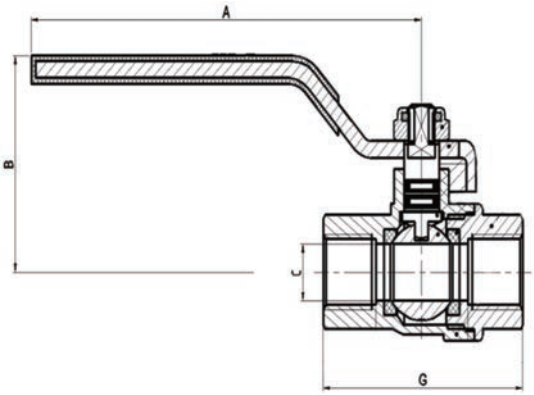

Materials

NO.	PART	Materials
1	Body	Brass BS EN 12165 CW617N
2	Bonnet	Brass BS EN 12165 CW617N
3	Seat	PTFE
4	Ball	Brass
5	Stem	Brass
6	O-Ring	NBR(EN549 Certificate)
7	Handle	Q235
8	Lock Nut	SS304

Dimensions

SIZE (inch)	A (mm)	B (mm)	C (mm)	G (mm)
1/4"	89	38	10	46
3/8"	89	39	12	56
1/2"	89	42	15	58
3/4"	89	46	20	67
1"	112	60	25	81
1-1/4"	131	70	32	95
1-1/2"	131	76	40	103
2"	160	83	50	126

HC-10172&HC-30172

Lead Free Brass Gas Ball valve **1/2PSI/5PSI/175PSI**

Feature & Benifits

- CSA, FM, UL, NSF, cUPC Certified
- Full Port
- Lead Free Brass , complies with 0.25% weighted average lead content on wetted surfaces in accordance with the Safe Drinking WaterAct (SDWA)/ Federal Public Law No. 111-380.
- 1/4" to 1" LF Brass Ball Chrome Plated , 1 1/4" -2" 304 Stainless Steel Ball
- Steel lever handle with anti-corrosion treatment which can bear Neutral salt
- Spray test 144 hours and yellow PVC coating
- O Ring with N7118 certified NBR on the stem
- Seat with NSF certified PTFE
- IPS : CSA , FM , UL , NSF61 , NSF 372 , cUPC certified
- SWT : FM , UL , NSF61 , NSF 372 , cUPC certified
- Valves are Tested in Accordance with MSS-SP-110

HC-30172 **HC-10172**

Product will have LF imprinted on the body for Lead Free

Test Pressure & Tempreture

Tempreture	Hydraulic
-20°C to 60°C	Seat: 1/2PSI - 3PSI
	Seat: 5PSI- 7.5 PSI
	Seat: 175 PSI - 262.5 PSI

Connection Standard

- US END CONNECTION: ANSI B1.20.1
- Medium: Natural Gas

Materials

NO.	PART	Materials
1	Body	Brass C46500
2	Bonnet	Brass C46500
3	Seat	PTFE
4	Ball	Brass C46500
5	Stem	Brass
6	O-Ring	NBR(EN549 Certificate)
7	Gland	PTFE
8	Nut	Brass
9	Handle	Q235
10	Gasket	65Mn
11	Nut	Q235

Dimensional Drawing

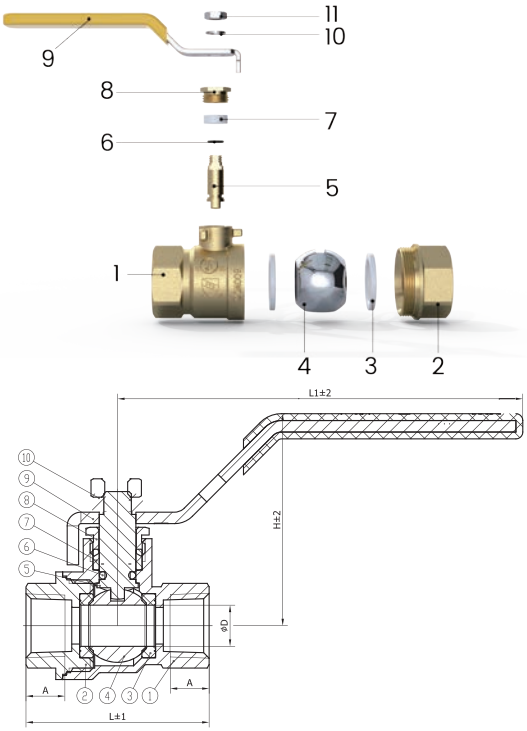

Dimensions

SIZE (inch)	D (mm)	L (mm)	L1 (mm)	H (mm)	A (mm)
1/4"	9	40	89	46	9
3/8"	10	42	89	47	9
1/2"	15	54	103	47	13
3/4"	19	62	103	53	13
1"	25	74	126	63	17
1-1/4"	32	83	126	71	17
1-1/2"	40	97	149	86	19
2"	50	113	149	93	20

HC-12342

One Piece Brass Gas Ball valve

1/2PSI/5PSI/175 PSI

Feature & Benifits

- CSA Certified
- Forging Brass
- One Piece Design
- ANSI Z21.15/csa 9.1(1/2&5 psig) certified
- ASME B16.44/AGA3.88(5g)certified
- CSA 3.16 certified for FIP XFIP Gas Valves

Test Pressure & Tempreture

Tempreture	Hydraulic
-20°C to 60°C	Seat: 1/2PSI - 3PSI
	Seat: 5PSI- 7.5 PSI
	Seat: 175 PSI - 262.5 PSI

Connection Standard

- US END CONNECTION: ANSI B1.20.1
- Medium: Water , Oil , Gas

Materials

NO.	PART	Materials
1	Body	Brass C37700
2	Seat	PTFE
3	Ball	Brass C37700
4	O-Ring	NBR
5	Nut	Brass C37700
6	O-Ring	NBR
7	Handle	Aluminum
8	Nut	304

Dimensional Drawing

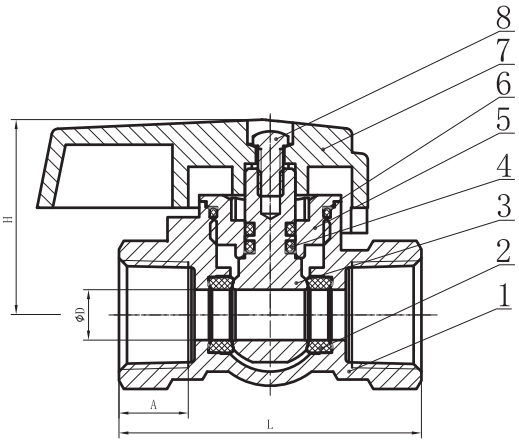

Dimensions

SIZE (inch)	DN	D (mm)	L (mm)	H (mm)	A (mm)
3/8"	10	8	48	31	11
1/2"	15	10	57	33	14
3/4"	20	15	64	35	15
1"	25	20	74	39	17

butterfly valve

HC-90501&HC-90502

Lug Type Butterfly Valve **PN16**

Feature & Benifits

- Medium: Fresh water, Sewage, Sea water, Air, Oil, Acids, Alkalis, Salts, etc
- Stainess steel Disc
- EPDM seat
- To suit PN 10 , PN16 and ANSI 150 Flanges
- WRAS approved Non-metal parts
- WRAS approved coating

HC-90501 HC-90502

Test Pressure & Tempreture

Tempreture	Hydraulic
-45°C to 200°C	Shell: 24 bar
	Seat: 17.6 bar

Connection Standard

- Design: API609, BS5155, BSEN593
- Top flange: ISO5211
- Tests: EN12266-1

Material

NO.	Part Name	Material
1	Body	Cast Iron/Ductile Iron
2	Seat	EPDM
3	Bottom Shaft	SS416
4	Disc	Dutile Iron Nickle Plated/SS304/SS316
5	Bushing	PTFE
6	Up Shaft	SS416/SS420
7	O Ring	EPDM
8	Bushing	PTFE
9	Pin	SS416
10	O Ring	EPDM
11	Lever	Malleable Cast Iron/Aluminum

Dimensional Drawing

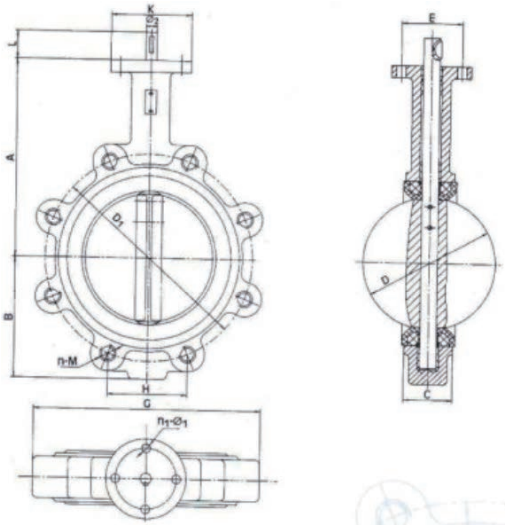

Dimensions

DN	A	B	C	D	L	H	D1	n-M	K	E	n1	O1	O2
50	161	80	42	52.9	32	88.38	125	4-M16	77	57.15	4-6.7	12.6	118
65	175	89	44.7	64.5	32	102.54	145	4-M16	77	57.15	4-6.7	12.6	137
80	181	95	45.2	78.8	32	61.23	160	8-M16	77	57.15	4-6.7	12.6	178
100	200	114	52.1	104	32	68.88	180	8-M16	92	69.85	4-10.3	15.77	206
125	213	127	54.4	123.3	32	80.36	210	8-M16	92	69.85	4-10.3	18.92	238
150	226	139	55.8	155.6	32	91.84	240	8-M20	92	69.85	4-10.3	18.92	266
200	260	175	60.6	202.5	45	112.89/76.35	295	8-M20/12-M20	115	88.9	4-14.3	22.10	329
250	292	203	65.6	250.5	45	90.59/91.88	350/355	12-M20/12-M20	115	88.9	4-14.3	28.45	393
300	337	242	76.9	301.6	45	103.22/106.12	400/410	12-M20/12-M24	140	107.95	4-14.3	31.60	462
350	368	267	76.5	333.3	45	89.74/91.69	460/470	16-M20/16-M24	140	107.95	4-14.3	31.60	515
400	400	309	86.5	389.6	51.2/72	100.47/102.42	515/525	16-M27/16-M27	197	158.75	4-20.6	33.15	579
450	422	328	105.6	440.5	51.2/72	88.38/91.51	565/585	20-M24/20-M27	197	158.75	4-20.6	38	627
500	480	361	131.8	491.6	64.2/82	96.99/101.68	620/650	20-M24/20-M30	197	158.75	4-20.6	41.15	696
600	562	459	152	592.5	64.2/82	113.42/120.46	725/770	20-M24/20-M33	276	215.9	4-22.2	50.65	821

HC-90511

Double Flanged Type Concentric Butterfly Valve ***PN10/PN16***

Feature & Benifits

- Medium: Fresh water, Sewage, Sea water, Air, Oil, Acids, Alkalis, Salts, etc
- Temperature: -10°C~120°C

Test Pressure & Tempreture

Tempreture	Hydraulic
-20°C to 120°C	Shell: 24 bar
	Seat: 17.6 PSI

Connection Standard

- Design: MSS SP-67, BS5155, BSEN593
- Face to face: API609, DIN3202
- End flange: EN1092-2, ASME B16.1/16.42,AS4087
- Tests: EN12266/API598

Material

NO.	Part Name	Material
1	Body	Cast Iron/Ductile Iron
2	Bushing	PTFE-F4
3	Seat	EPDM
4	Shaft	SS416
5	Disc	Ductile Iron/SS304
6	Pin	SS416
7	O Ring	EPDM
8	Screw	SS416
9	Gearbox	Ductile Iron

Dimensional Drawing

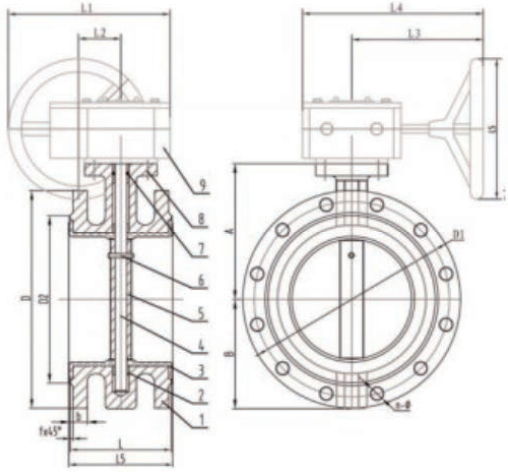

Dimensions

DN	A	B	L	L5	fx45	D	D1	D2	n-Φ	b	L1	L2	L3	L4	L5
50	126	83	108	111	3	165/165	125/125	102/102	4-Φ19/4-Φ19	19/19	172	45	173	226	150
65	132	93	112	115	3	185/185	145/145	122/122	4-Φ19/4-Φ19	19/19	172	45	173	226	150
80	146	100	114	117	3	200/200	160/160	133/133	8-Φ19/8-Φ19	19/19	172	45	173	226	150
100	155	114	127	130	3	220/220	180/180	158/158	8-Φ19/8-Φ19	19/19	172	45	173	226	150
125	170	125	140	143	3	250/250	210/210	184/184	8-Φ19/8-Φ19	19/19	172	45	173	226	150
150	192	143	140	143	3	285/285	240/240	212/212	8-Φ23/8-Φ23	19/19	172	45	173	226	150
200	226	170	152	155	3	340/340	295/295	268/268	8-Φ23/8-Φ23	20/20	289	63	237	313	300
250	265	198	165	168	3	395/405	350/355	320/320	12-Φ23/12-Φ23	22/22	289	63	237	313	300
300	297	223	178	182	4	445/460	400/410	370/370	12-Φ23/12-Φ28	24.5/24.5	310	78	225	307	300
350	338	270	190	194	4	505/520	460/470	430/430	16-Φ23/16-Φ28	24.5/26.5	310	78	225	307	300
400	350	300	216	221	4	565/580	515/520	482/482	16-Φ28/16-Φ31	24.5/28	434	181	94	357	300
450	375	340	222	227	4	615/715	565/585	532/548	20-Φ28/20-Φ31	25.5/30	434	181	94	357	300
500	418	355	229	234	4	670/715	620/650	585/609	20-Φ28/20-Φ34	26.5/31.5	434	181	94	357	300
600	490	410	267	272	5	780/840	725/770	685/720	20-Φ31/20-Φ37	30/36	531	200	125	432	400
700	550	478	292	299	5	895/910	840/840	800/74	24-Φ31/24-Φ40	32.5/39.5	574	228	140	501	400
800	610	529	318	325	5	1015/1025	950/950	905/901	24-Φ31/24-Φ40	35/43	576	28	140	501	400
900	660	584	330	337	5	1115/1125	1050/1050	1005/1001	28-Φ34/28-Φ40	37.5/46.5	638	243	162	547	450
1000	718	657	410	417	5	1230/1255	1160/1170	1110/1112	28-Φ37/28-Φ43	40/50	638	243	162	547	450
1200	860	799	470	478	5	1455/1485	1380/1390	1330/1328	32-Φ40/32-Φ49	45/57	777	302	236	656	450

HC-90601

Wafer Type Butterfly Valve ***PN10/PN16***

Feature & Benifits

- Medium: Fresh water, Sewage, Sea water, Air, Oil, Acids, Alkalis, Salts, etc
- Temperature: -45°C~200°C

Test Pressure & Tempreture

Tempreture	Hydraulic
-20°C to 120°C	Shell: 24 bar
	Seat: 17.6 PSI

Connection Standard

- Design: API609, BS5155, BSEN593
- Top Flange: ISO5211
- Tests: EN12266-1

Material

NO.	Part Name	Material
1	Body	Cast Iron/Ductile Iron
2	Bushing	PTFE-F4
3	Seat	EPDM
4	Shaft	SS416/SS420
5	Disc	Ductile Iron/SS304/SS316
6	Pin	SS416
7	O ring	EPDM
8	Screw	SS201
9	Lever	Malleable Cast Iron/Aluminum

Dimensional Drawing

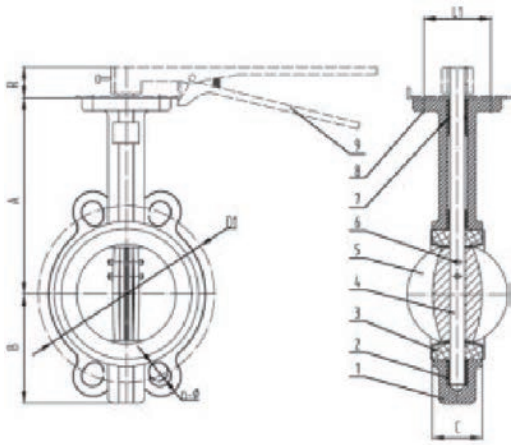

Dimensions

DN	A	B	D1(PN10)	D1(PN16)	C	n-Φ(PN10)	n-Φ(PN16)	L	L1	n-d
50	140	70	120		42	175		111	57	25±2.5
65	152	78	136.2		44	215		111	57	25±2.5
80	159	95	160		45	230		111	57	25±2.5
100	178	110	185		51	265		111	70	25±2.5
125	190	124	215		54	380		111	70	25±2.5
150	203	139	238		55	215		111	70	25±2.5
200	238	172	295		60	230		196	89	34±2.5
250	268	212	357		65	265		196	89	40±2.5
300	306	242	407		76	380		196	108	45±2.5

HC-90611

Wafer Type Butterfly Valve **PN16**

Feature & Benifits

- Stainless steel disc and stem
- Quarter turn
- EPDM liner
- Ductile iron body
- Semi lugged to BS EN 593: 2004
- Face to face dimention to BS EN 558 : 2008
- Non- Metal parts WRAS approved

Test Pressure & Tempreture

Tempreture	Hydraulic
0°C to 80°C	Shell: 24 bar
	Seat: 17.6 bar

Connection Standard

- Flanged to EN 1092-2 , BS4505

Material

NO.	Part	Material
1	Body	Ductile iron
2	Axie Sleeve I	Compound meterial
3	Seat	EPDM
4	Shaft	SS420
5	DISC	CF8
6	Conical pin	SS304
7	O Ring	NBR
8	Axie Sleeve II	Compound meterial
9	Woodruff key	Carton steel
10	Gear box	Ductile iron
11	Bolt	Carton steel
12	Washer	Carton steel

Dimensional Drawing

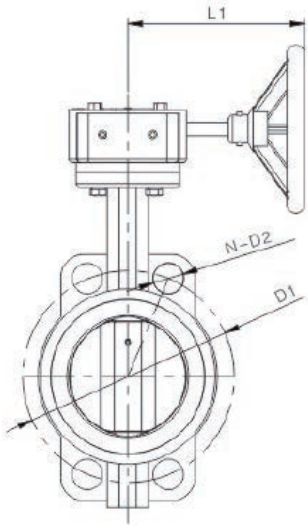

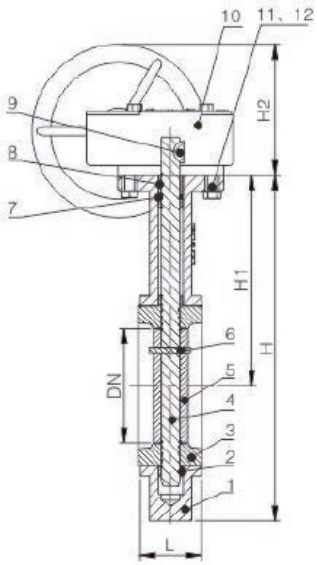

Dimensions

DN	L	H	H1	H2	L1	D1	N-d1	Torque
50	43	226	144	100	140	125	4-Φ19	14
65	46	245	155	100	140	145	4-Φ19	18
80	46	260	161	100	140	160	8-Φ19	21
100	52	293	178	100	140	180	8-Φ19	37
125	56	322	193	100	140	210	8-Φ19	66
150	56	350	206	100	140	240	8-Φ23	110
200	60	435	280	180	140	295	8-Φ23 12-Φ23	160
250	68	495	292	180	200	350/355	12-Φ23 12-Φ28	340
300	78	579	337	180	200	400/410	12-Φ23 12-Φ28	520
350	78	656	368	230	220	460/470	16-Φ23 16-Φ28	960
400	102	731	400	270	250	515/525	16-Φ28 16-Φ31	1500
450	114	777	422	270	250	565/585	20-Φ28 20-Φ31	2000
500	127	868	480	300	280	620/650	20-Φ28 20-Φ34	2500
600	151	1021	562	300	280	725/770	20-Φ31 20-Φ37	4100

check valve

HC-25081

Bronze Swing Check Valve **PN20**

Feature & Benifits

- Robust and high quality bronze body
- Check valves permit flow in one direction only and close automatically if flow reverses
- Entirely automatic in action, depending upon pressure and velocity of flow within the line to perform their functions of opening and closing
- Lift Check Valves should only be used in horizontal pipe runs

Test Pressure & Tempreture

Tempreture	Hydraulic
-20°C to 120°C	Shell: 30 bar
	Seat: 22 bar

Connection Standard

- US END CONNECTION: ANSI B1.20.1
- ISO228-1 parallel thread
- Medium: Water

Materials

NO.	PART	Materials
1	Body	Bronze C83600
2	Bonnet	Bronze C83600
3	Clapper	Bronze C83600
4	Seal Ring	PTFE
5	Pin	SS304
6	Plug	Brass

Dimensional Drawing

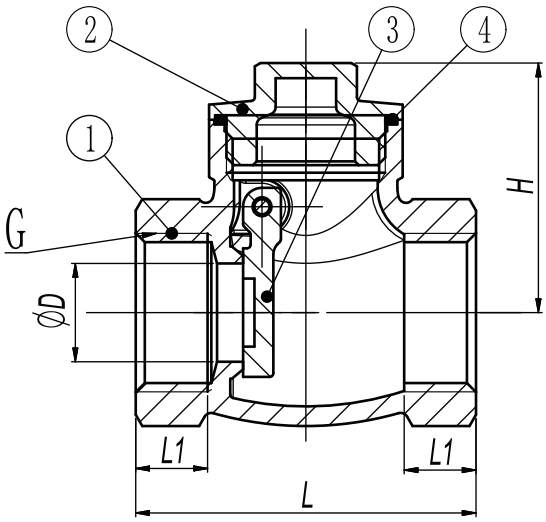

Dimensions

SIZE (inch)	L (mm)	L1 (mm)	H (mm)	D (mm)
1/2"	53	14	33	13
3/4"	62	15	40	17
1"	71	17	47	23
1-1/4"	88	20	54	28
1-1/2"	95	20	61	33
2"	116	24	72	45

Pressure & temperature ratings

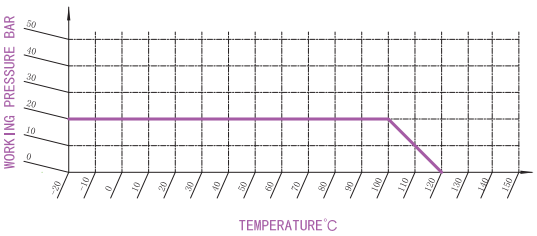

HC-04133

Lead Free Brass Swing Check Valve **200PSI**

Feature & Benifits

- UPC , NSF 61, NSF 372 certified
- Ftheck valves permit flow in one direction only and close automaically if flow reverses
- Entirely automatic in action, depending upon pressure and velocity of flow within the line to perform their functions of opening and closing
- Lift Check Valves should only be used in horizontal pipe runs

Pressure & Tempressure

Tempreture	Hydraulic
-20°C+ 120°C	Shell : 300PSI
	Seat : 200PSI

Connection Standard

- US END CONNECTION: ANSI B1.20.1
- ISO228-1 parallel thread
- Medium: Water

Materials

NO.	PART	Materials
1	Body	Brass C46500
2	Gasket	PTFE(NSF61 certified)
3	Bonnet	Brass C46500
4	Gate	Brass C46500
5	Bolt	Brass
6	Cap	Brass

Dimensional Drawing

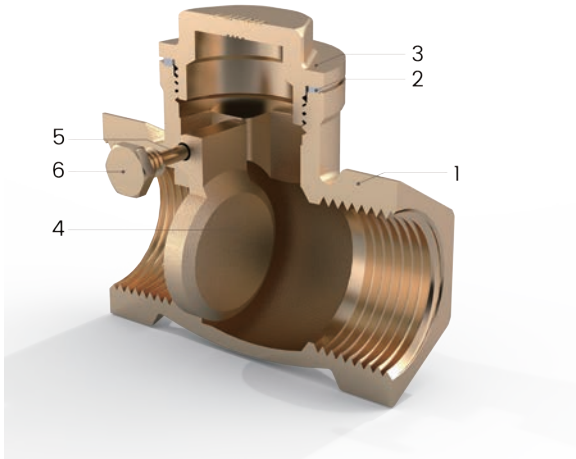

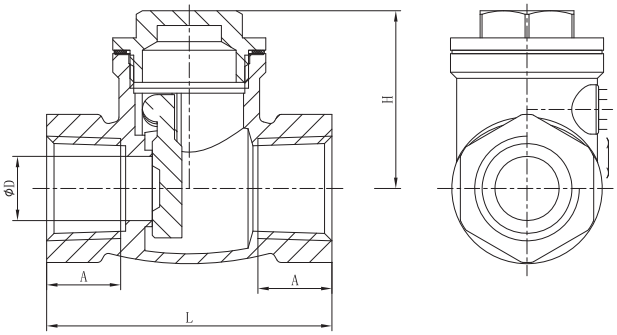

Dimensions

SIZE (inch)	L (mm)	A (mm)	H (mm)	D (mm)
1/2"	58	15	36	13
3/4"	62	16	39	18
1"	67	14	43	22
1-1/4"	72	14	52	30
1-1/2"	80	16	60	36
2"	97	18	68	44

Pressure & temperature ratings

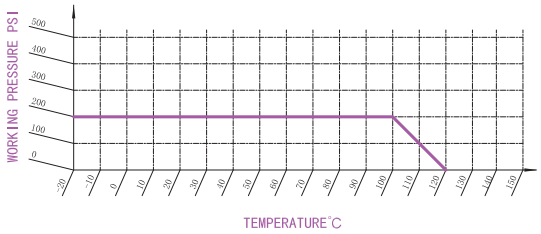

HC-12051

Brass Vertical Check Valve **PN25**

Feature & Benifits

- ACS Certified
- Europe Brass CW617N
- Stainless steel springs
- Brass core

Test Pressure & Temperature

Tempreture	Hydraulic
-10°C to 90°C	Shell: 37.5bar
	Seat: 27.5bar

Connection Standard

- ISO228-1 parallel thread
- Medium: Water

Materials

NO.	PART	Materials
1	Adjustable Nut	Brass CW617N
2	O-Ring	EPDM
3	Spring	AISI 304
4	Bonnet	Brass CW617N
5	O-Ring	EPDM

Dimensional Drawing

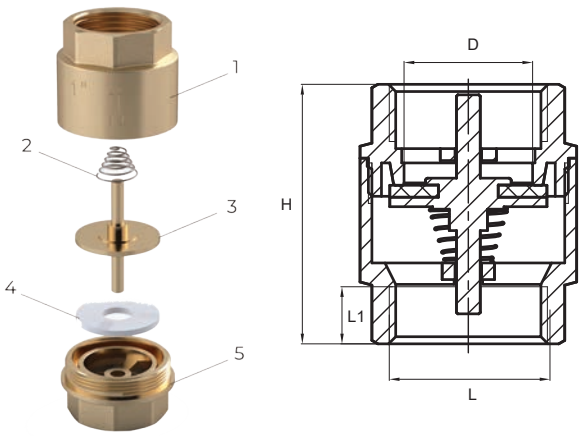

Installation Dimensions

SIZE (inch)	L (mm)	L1 (mm)	H (mm)	D (mm)
1/2"	1/2	10	45	17
3/4"	3/4	10	49	21
1"	1	12	54.50	27
1-1/4"	1 1/4	12.50	57.50	35
1-1/2"	1 1/2	14.50	66	42
2"	2	15	73	54

Pressure & temperature ratings

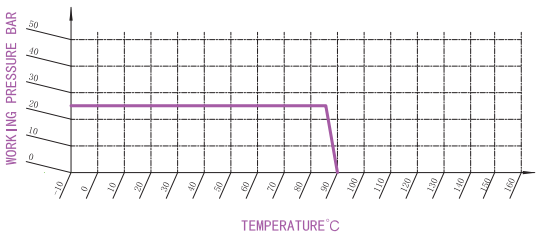

HC-12051F

Brass Foot Valve **PN25**

Feature & Benifits

- ACS Certified
- Europe Brass CW617N
- Stainless steel springs
- Brass core
- ABS pin and washer
- EPDM sealing washer
- Stainless steel screw in filter

Pressure & Tempressure

Tempreture	Hydraulic
-10°C+ 90°C	Shell : 37.5bar
	Seat : 27.5bar

Connection Standard

- ISO228-1 parallel thread
- Medium: Water

Materials

NO.	PART	Materials
1	Body	Brass CW617N
2	Spring	304
3	Core	Brass
4	Rubber mat	EPDM
5	Bonner	Brass CW617N
6	Filter	304/ABS

Dimensional Drawing

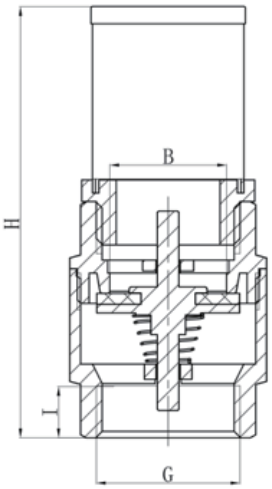

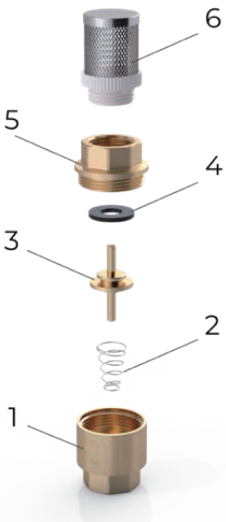

Installation Dimensions

SIZE (inch)	H (mm)	i (mm)	B (mm)
1/2"	77	10	17
3/4"	84	10	21
1"	100	12	27
1-1/4"	109	13	35
1-1/2"	125	15	42
2"	141	15	54

FLOW DIFFERENCE CHARACTERISTIC OF CLEANING FILTER

SIZE (inch)	Cv	Kv
1/2"	3.35	2.03
3/4"	5.59	4.82
1"	10.03	8.65
1-1/4"	15.08	13
1-1/2"	20.88	18
2"	32.48	28

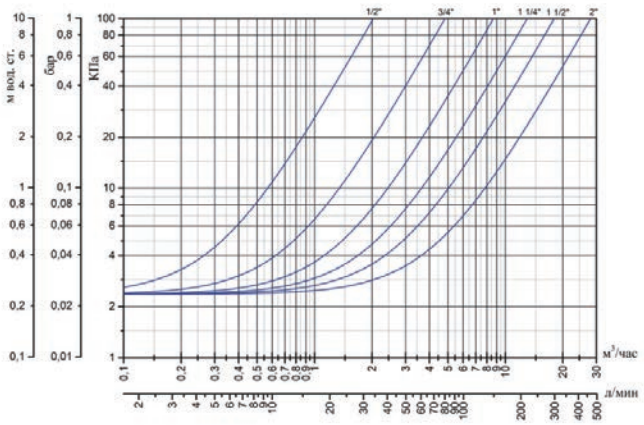

Pressure & temperature ratings

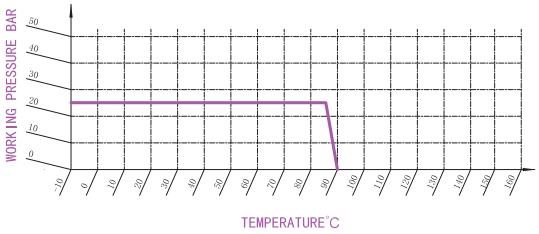

HC-12071

Bronze Spring Check Valve **PN20**

Feature & Benifits

- Stainless steel springs
- Bronze core

Test Pressure & Temperature

Tempreture	Hydraulic
-20°C to 120°C	Shell: 30 bar
	Seat: 22 bar

Connection Standard

- ISO228-1 parallel thread
- Medium: Water

Materials

NO.	PART	Materials
1	DISC	Bronze C83600
2	Seal ring	EPDM
3	Spring	304SS
4	Body	Bronze C83600
5	Bonnet	Bronze C83600

Dimensional Drawing

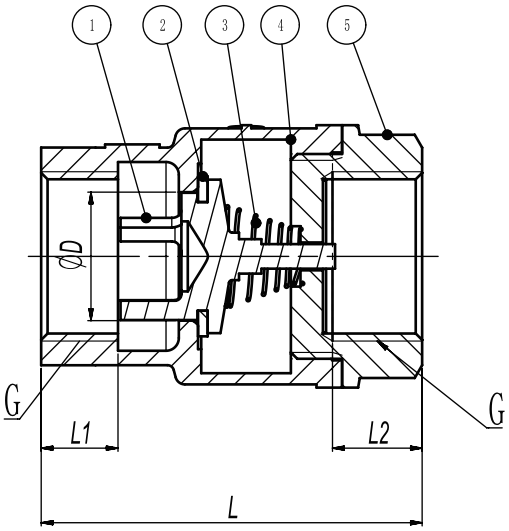

Dimensions

SIZE (inch)	L (mm)	L1 (mm)	L2 (mm)	D (mm)	G
1/2"	52	11	13	Φ15	1/2"
3/4"	60	12	14	Φ20	3/4"
1"	70	14	17	Φ25	1"
1-1/4"	78	18	18	Φ32	1-1/4"
1-1/2"	85	18	19	Φ40	1-1/2"
2"	98	19	22	Φ50	2"

Pressure & temperature ratings

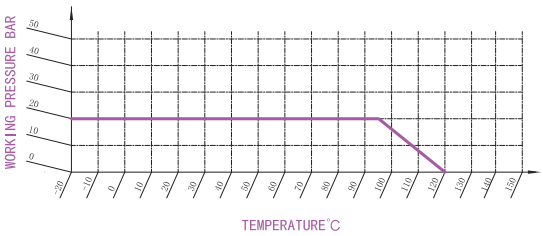

HC-12071F

Bronze Foot Valve **PN20**

Feature & Benifits

- Stainless steel springs
- Bronze core

Test Pressure & Temperature

Tempreture	Hydraulic
-20°C to 110°C	Shell: 30 bar
	Seat: 22 bar

Connection Standard

- ISO228-1 parallel thread
- Medium: Water

Materials

NO.	PART	Materials
1	DISC	Bronze C83600
2	Seal ring	EPDM
3	Spring	304SS
4	Body	Bronze C83600
5	Bonnet	Bronze C83600
6	Filter mesh	304SS

Dimensional Drawing

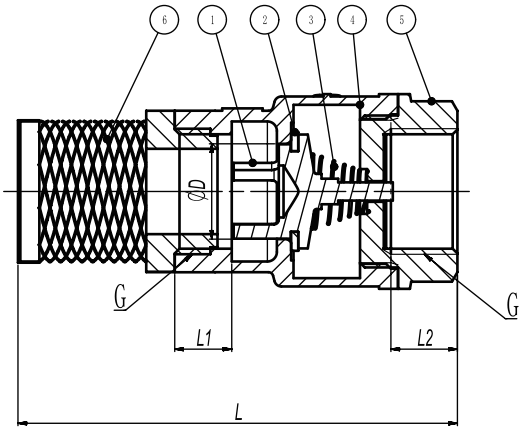

Dimensions

SIZE (inch)	L (mm)	L1 (mm)	L2 (mm)	D (mm)	G
1/2"	85	11	13	Φ15	1/2"
3/4"	93	12	14	Φ20	3/4"
1"	112	14	17	Φ25	1"
1-1/4"	126	18	18	Φ32	1-1/4"
1-1/2"	167	18	19	Φ40	1-1/2"
2"	179	19	22	Φ50	2"

Pressure & temperature ratings

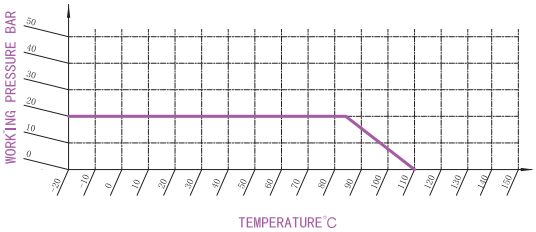

HC-92001

Foot Valve ***PN10/PN16/CL125/CL150***

Feature & Benifits

- Cast Iron with integral flanges
- Manufactured in accordance with BS EN 1171: 2002
- Stainless steel stem
- Non -rising
- ductile iron body
- Valves are Tested in Accordance with MSS SP-70 Class 125 and BS5150 ANSI 125.
- Non- Metal parts WRAS approved

TYPE A:
With Two Flange

TYPE B:
With One Flange

Test Pressure & Tempreture

Tempreture	Hydraulic
-20°C to 120°C	Shell: 24 bar
	Seat: 17.6 PSI

Connection Standard

- Design: BS5153
- End flange: EN1092-2, ASME B16.1/16.42,AS4087
- Tests: EN12266

Material

NO.	Part Name	Material	Standard
1	Screen	Stainless Steel	ASTM A959
2	Bolts	C45E/1045/SS304	ASTM A959
3	Washers	C45E/1045/SS304	ASTM A959
4	Body	Ductile Iron	DIN1693/BS EN1563
5	Disc	EPDM+Carbon Steel	ISO4633
6	Stem	X20Cr13/420	EN10088-1/ASTM A959
7	Spring	Stainless Steel	ASTM A959
8	Screw	C45E/1045/SS304	ASTM A959
9	Guide Sleeve	CuZn39Pb1	EN12167
10	Guide Seat	Ductile Iron	DIN1691/BS EN1563
11	Screw	C45E/1045/SS304	ASTM A959

Dimensional Drawing

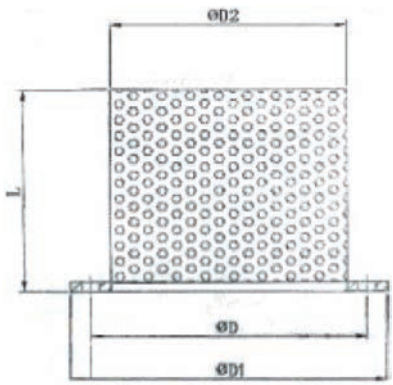

TYPE A: With Two Flange

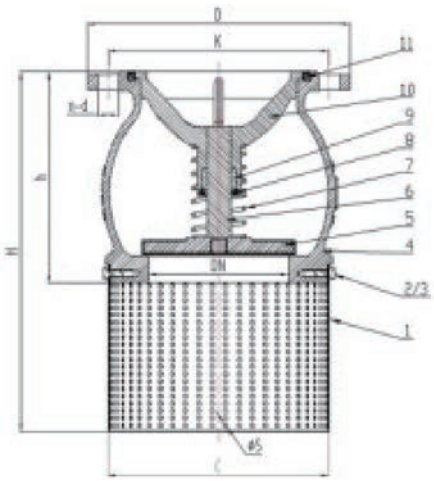

TYPE B: With One Flange

Dimensions

DN	DIMENSIONS mm			END FLANGE PN10/PN16-CL125/150 mm								
				EN1092-2			ASME B16.1/B16.42			AS4087		
	H	h	c	D	K	n-d	D	K	n-d	D	K	n-d
50	-	-	Φ94	165	110	4-Φ19	152	120.5	4-Φ16	-	-	-
65	-	-	Φ120	185	125	4-Φ19	178	139.5	4-Φ19	-	-	-
80	240	140	Φ137	200	145	8-Φ19	191	152.5	4-Φ19	185	146	4-Φ18
100	300	170	Φ179	220	160	8-Φ19	229	190.5	8-Φ19	215	178	4-Φ18
125	-	-	Φ206	250	180	8-Φ19	254	216	8-Φ22	-	-	-
150	392	230	Φ240	285	210	8-Φ23	279	241.5	8-Φ22	280	235	8-Φ18
250	463	288	Φ292	340	240	8-Φ23/12-Φ23	343	298.5	8-Φ22	335	292	8-Φ18
300	515	325	Φ328	395/405	350/355	12-Φ23/12-Φ28	406	362	12-Φ25	405	356	8-Φ22
250	590	375	Φ358	445/460	445/460	12-Φ23/12-Φ28	483	432	12-Φ25	455	406	12-Φ22

HC-10102

Brass DZR Double Check Valve **PN16**

Feature & Benifits

- WRAS Approved for use with wholesome (potable) water to 60°C
- Double check valves are used to prevent the risk of backflow and back siphonage contamination in domestic dwellings, public and commercial buildings
- With a maximum inlet/working pressure of 16 bar
- Compliant with BS EN 13959 'Anti- pollution check valves' family E type D

Test Pressure & Tempreture

Tempreture	Hydraulic
-10°C to 85°C	Shell: 24bar
	Seat: 17.6bar

Connection Standard

- Compression version supplied with ends complying with BS EN 1254-2

Materials

NO.	PART	Materials
1	Body	DZR CW602N
2	Test Plug	CW617N
3	O ring	EP 7118F certified EPDM
4	Non- returen valve	WRAS approved elastnor
5	Circlip	Stainless steel 304
6	O ring	EP 7118F certified EPDM
7	Compression Olive	H62
8	Compression Nut	DZR CW602N

Dimensional Drawing

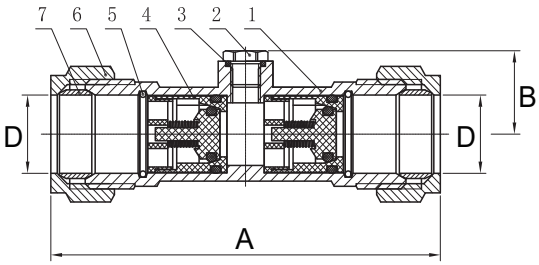

Dimensions

Size (inch)	A (mm)	B (mm)	D (mm)
15mm	78	16	15
22mm	105	23	22
28mm	125	23	28
35mm	136	30	35
42mm	154	34	42
54mm	193	40	54

Pressure & temperature ratings

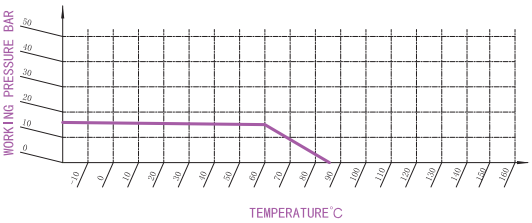

HC-10512

Brass DZR Double Check Valve **PN16**

Feature & Benifits

- WRAS Approved for use with wholesome (potable) water to 85°C
- Double check valves are used to prevent the risk of backflow and back siphonage contamination in domestic dwellings, public and commercial buildings
- With a maximum inlet/working pressure of 16 bar
- Compliant with BS EN 13959 'Anti- pollution check valves' family E type D

Test Pressure & Tempreture

Tempreture	Hydraulic
-10°C to 85°C	Shell: 24bar
	Seat: 17.6bar

Connection Standard

- ISO228-1 parallel thread
- Medium: Water

Materials

NO.	PART	Materials
1	Body	DZR CZ132
2	Hexagonal Screw	Brass
3	O ring	EPDM
4	Stop Reverse Core	Brass
5	Clip Spring	Stainless Steel 304

Dimensional Drawing

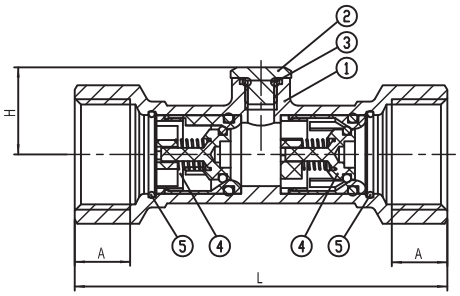

Dimensions

Size (inch)	A (mm)	L (mm)	H (mm)
1/2"	10.5	70.5	16.5
3/4"	11.5	78	20
1"	13.5	106	22.5
1 1/4"	14.5	114	30
1 1/2"	15.5	130	33.5
2"	17	168	39.5

Pressure & temperature ratings

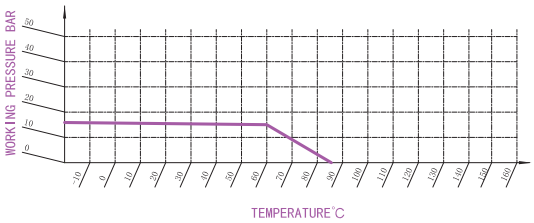

HC-90901

Wafer Check Valve

PN10 / PN16

Feature & Benifits

- Self-acting , spring assisted , closure
- Dual plate wafer pattern
- Cast iron body
- BS EN 12334:2001 for use with flanges to BS EN 1092-2
- Face to face dimention to BS EN 558-1

Test Pressure & Tempreture

Tempreture	Hydraulic
0°C to 80°C	Shell: 24 bar
	Seat: 17.6 bar

Connection Standard

- Flanged to EN 1092-2 , BS4505

Material

NO.	Part	Material
1	Body	Ductile iron
2	Flap	Ductile iron Nickel Plated +Ni, Stainless steel CF8
3	Support shaft	Stainless Steel 20Cr13
4	Sealed seat	EPDM EPDM
5	Limiting axis	Stainless Steal 20Cr13
6	Spring	SS304
7	Screw ping	Carbon steel galvanized

Dimensional Drawing

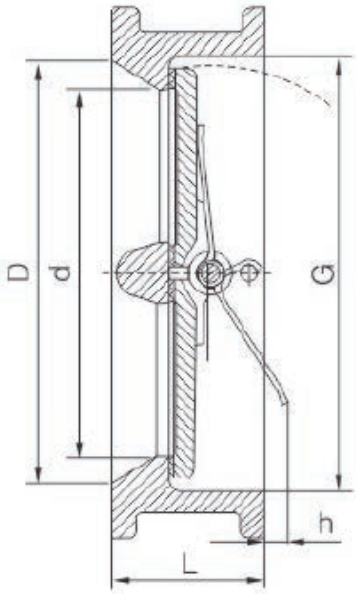

Dimensions

DN	L	D(PN10)	D(PN10)	d	G	h	Torque
50	43	105	105	46	60	6	1.3
65	46	124	124	60	73	10	1.37
80	64	142	142	70	89	10	1.42
100	64	162	162	88	110	20	1.48
125	70	192	192	115	141	25	1.52
150	76	218	218	134	168	32	1.53
200	89	272	273	184	219	40	1.61
250	114	328	328	220	273	59	1.68
300	114	378	384	260	324	64	1.74
350	127	438	444	298	356	80	1.86
400	140	489	495	350	418	106	1.98
450	152	540	555	385	457	116	2.15
500	152	594	616	438	526	138	2.24
600	178	685	734	538	626	169	2.31

HC-91401

Swing Check Valve **PN16**

Feature & Benifits

- Cast Iron with integral flanges
- Manufactured in accordance with BS 5153, MSS SP-71
- Horizontal or vertical fixing
- Ductile iron bonnet
- Cast Iron/Ductile iron body
- Valves are Tested in Accordance with EN 12266
- WRAS approved Non- Metal parts
- WRAS approved coating

Test Pressure & Tempreture

Tempreture	Hydraulic
-20°C to 120°C	Shell: 24 bar
	Seat: 17.6 bar

Connection Standard

- Design: BS5153, MSS SP-71
- Face to face: BS5153, ASME B16.10,DIN F6
- End flange: EN1092-2, ASME B16.1/16.42,AS4087
- Tests: EN12266

Material

NO.	Part Name	Material	Standard
1	Body	Cast Iron/Ductile Iron	DIN1691/DIN1693
2	Seat Ring	Brass/Bronze	EN12167
3	Disc Ring	Brass/Bronze	EN12167
4	Washer	Carbon Steel	EN10083-2/ASTM A29
5	Locking Nut	Carbon Steel	EN10083-2/ASTM A29
6	Arm	Ductile Iron	DIN1693/BS EN1563
7	Hing Pin	Stainless Steel	EN10088-1/ASTM A959
8	Plug	Carbon Steel	EN10083-2/ASTM A29
9	Gasket	Nylon	
10	Gasket	NBR	ISO4633
11	Bolt	Carbon Steel	EN10083-2/ASTM A29
12	Nut	Carbon Steel	EN10083-2/ASTM A29
13	Bonnet	Ductile Iron	DIN1691/BS EN1561

Dimensional Drawing

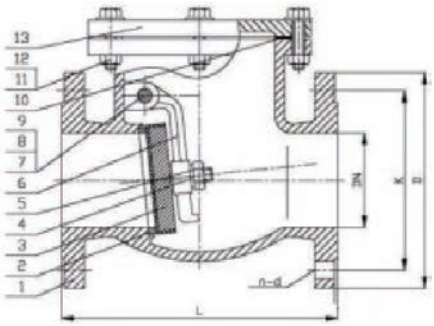

Dimensions

DN	OUTLINE mm			END FLANGE PN10/PN16-CL125/150 mm								
	BS 5153	ASME B16.10	DIN -F6	EN1092-2			ASME B16.1/B16.42			AS4087		
	L			D	K	n-d	D	K	n-d	D	K	n-d
40	165	165	180	150	110	4-Φ16	127	98.5	4-Φ16	-	-	-
50	203	203	200	165	125	4-Φ19	152	120.5	4-Φ19	-	-	-
65	216	216	240	185	145	4-Φ19	178	139.5	4-Φ19	-	-	-
80	241	241	260	200	160	4-Φ19	191	152.5	4-Φ19	185	146	4-Φ18
100	292	292	300	220	180	8-Φ19	229	190.5	8-Φ19	215	178	4-Φ18
125	330	330	350	250	210	8-Φ19	254	216	8-Φ22	-	-	-
150	356	356	400	285	240	8-Φ23	279	241.5	8-Φ22	280	235	8-Φ18
200	495	495	500	340	295	8-Φ23/12-Φ23	343	298.5	8-Φ22	335	292	8-Φ18
250	622	622	600	395/405	350/355	12-Φ23/12-Φ28	406	362	12-Φ25	405	356	8-Φ22
300	698	699	700	445/460	400/410	12-Φ23/12-Φ28	483	432	12-Φ25	455	406	12-Φ22
350	787	787	800	505/520	460/470	16-Φ23/16-Φ28	533	476	12-Φ28	525	470	12-Φ26
400	914	914	900	565/580	515/525	16-Φ28/16-Φ31	597	540	16-Φ28	580	521	12-Φ26
450	965	965	1000	615/640	565/585	20-Φ28/20-Φ31	635	578	16-Φ32	640	584	12-Φ26
500	1067	1067	1100	670/715	620/650	20-Φ28/20-Φ34	699	635	20-Φ32	705	641	16-Φ26
600	1219	1219	1300	780/840	725/770	20-Φ31/20-Φ37	813	749	20-Φ35	825	756	16-Φ30

Y pattern strainer

HC-30822

Brass Y Pattern Strainer **PN20**

Feature & Benifits

- WRAS Certified
- Europe Brass CW617N
- "Y" pattern strainer is a very necessary device in pipe systems networks. Its main purpose is to filter out impurities,dirt and foreign bodies, preventing all of these clog or deteriorate the devices that are installed downstream of the strainer itself.

Test Pressure & Tempreture

Tempreture	Hydraulic
-20°C to 120°C	Shell: 30 bar
	Seat: 22 bar

Connection Standard

- ISO228-1 parallel thread
- Medium: Water

Materials

NO.	PART	Materials
1	Body	Brass CW617N
2	Filter	304
3	Washer	EPDM
4	Cap	Brass CW617N

Dimensional Drawing

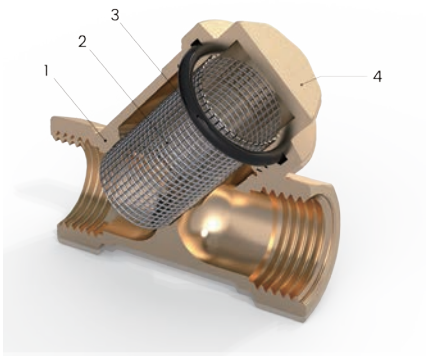

Dimensions

SIZE (inch)	A (mm)	L (mm)	B (mm)	H (mm)
1/2"	58	11	17	40
3/4"	70	16	23	48
1"	87	18	28	56
1-1/4"	96	19	35	67
1-1/2"	106	19	42	75
2"	126	21	55	90

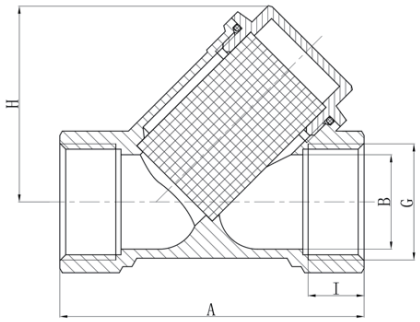

FLOW-DIFFERENCE CHARACTERISTIC OF A CLEANING FILTER

SIZE (inch)	Cv	Kv
1/2"	3.9	3.4
3/4"	7.1	6.1
1"	10.1	8.7
1-1/4"	16.7	14.4
1-1/2"	24.13	20.8
2"	28.19	24.3

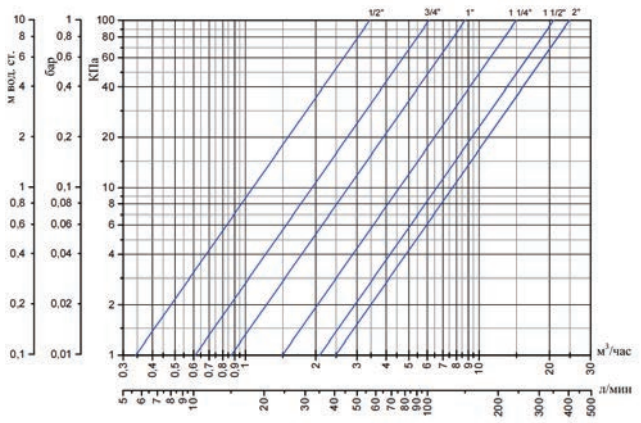

Pressure & temperature ratings

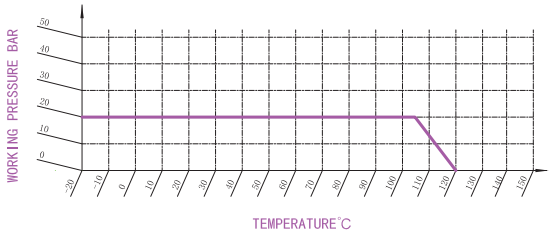

HC-06181

Bronze Y Pattern Strainer **PN25**

Feature & Benifits

- Robust and high quality bronze body with integral seating surfaces.
- Eliminate the problems caused by foreign matter within piping systems
- Perforated stainless steel screen with robust design, low flow resistance and high quality materials
- 0.75mm screen perforations

Test Pressure & Tempreture

Tempreture	Hydraulic
-20°C to 120°C	Shell: 37.5bar
	Seat: 27.5bar

Connection Standard

- US END CONNECTION: ANSI B1.20.1
- ISO228-1 parallel thread
- Medium: Water

Material

NO.	Part	Material
1	Body	Bronze C83600
2	Bonnet	Bronze C83600
3	Gasket	PTFE
4	Filter Mesh	304 SS

Dimensional Drawing

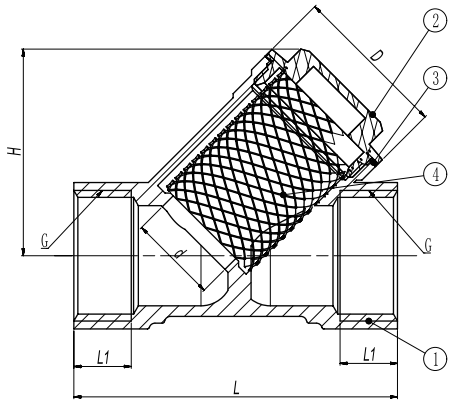

Dimensions

SIZE (inch)	L (mm)	L1 (mm)	H (mm)	d (mm)	D (mm)
1/2"	65	13	39	Φ14	29
3/4"	72	13	45	Φ19	34
1"	84	14	54	Φ24	41
1-1/4"	97	16	66	Φ30	50
1-1/2"	108	17	76	Φ34	55
2"	128	19	91	Φ47	69

Pressure & temperature ratings

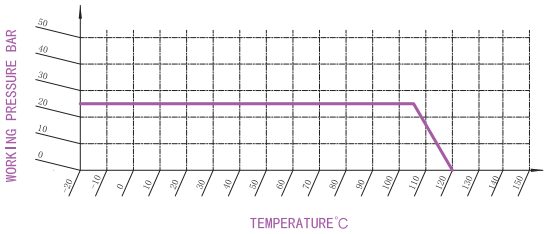

HC-91201

Flanged Y Strainer **PN10/PN16**

Feature & Benifits

- Test pressure: Strength 1.5Mpa/2.4Mpa
  Seal up 1.1Mpa/1.76Mpa
- Temperature: 0°C~80°C
- Medium: Clear, sewage, air

Test Pressure & Tempreture

Tempreture	Hydraulic
0°C to 80°C	Shell: 24 bar
	Seat: 17.6 PSI

Connection Standard

- Design: HG/T21637
- Face to face: BS558, ASME B16.10
- End flange: EN1092-2, ASME B16.1/16.42,AS4087
- Tests: EN12266

Material

NO.	Part Name	Material
1	Drain Plug	A2-70
2	O Ring	EPDM
3	Bonnet	GJS500-7
4	Bolts	A2-70
5	Washers	A2-70
6	O Ring	EPDM
7	Nut	A2-70
8	Screen	SS304
9	Body	GJS500-7

Dimensional Drawing

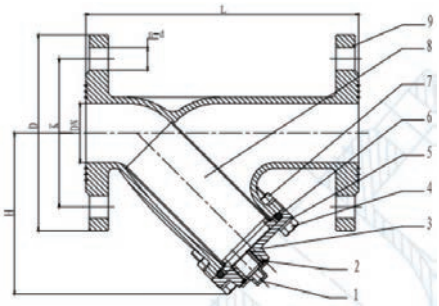

Dimensions

DN	OUTLINE mm		END FLANGE PN10/PN16 mm		
	DIN-F1		EN1092-2		
	L	H	D	D	n-d
15	130	78	95	65	4-Φ14
20	150	84	105	75	4-Φ14
25	160	87	115	85	4-Φ14
32	180	105	140	100	4-Φ19
40	200	108	150	110	4-Φ19
50	230	136	165	125	4-Φ19
65	290	162	185	145	4-Φ19
80	310	184	200	160	8-Φ19
100	350	211	220	180	8-Φ19
125	400	262	250	210	8-Φ19
150	480	301	285	240	8-Φ23
200	600	370	340	295	8-Φ23/12-Φ23
250	730	486	395/405	350/355	12-Φ23/12-Φ28
300	850	582	445/460	400/410	12-Φ23/12-Φ28
350	980	650	505/520	460/470	16-Φ23/12-Φ28
400	1100	711	565/580	515/525	16-Φ28/16-Φ31

HC-91301

Flanged Y Strainer **PN16**

Feature & Benifits

- Ductile Iron with integral flanges
- Manufactured in accordance with HG/T21637
- 1.5 to 3mm aperture mesh
- Ductile iron body
- Valves are Tested in Accordance with EN12266
- WRAS approved Non- Metal parts
- WRAS apporved coating

Test Pressure & Tempreture

Tempreture	Hydraulic
-20°C to 120°C	Shell: 24 bar
	Seat: 17.6 PSI

Connection Standard

- Design: HG/T21637
- Face to face: BS558, ASME B16.10
- End flange: EN1092-2, ASME B16.1/16.42,AS4087
- Tests: EN12266

Material

NO.	Part Name	Material	Standard
1	Body	Ductile Iron	DIN1693/DIN1563
2	Screen	X5CrNi18-10/SS304	EN10088-1/ASTM A959
3	Cover	Ductile Iron	DIN1693/BS EN1563
4	Plug	Brass/CS/SS	EN10083-2/ASTM A959
5	Cover Gasket	EPDM/NBR	ISO4633
6	Cover Gasket	Graphite With Soft Steel	
7	Bolt	C45E/1045	EN10083-2/ASTM A29

Dimensional Drawing

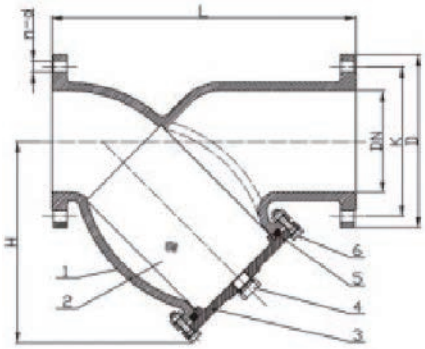

Dimensions

DN	OUTLINE mm			END FLANGE PN10/PN16-CL125/150 mm								
	BS 2080	ASME B16.10	DIN -F1	EN1092-2			ASME B16.1/B16.42			AS4087		
	L			D	K	n-d	D	K	n-d	D	K	n-d
40	-	200	200	150	110	4-Φ19	127	98.5	4-Φ16	-	-	-
50	220	225.4	230	165	125	4-Φ19	152	120.5	4-Φ19	-	-	-
65	270	273	290	185	145	4-Φ19	178	139.5	4-Φ19	-	-	-
80	290	292	310	200	160	8-Φ19	191	152.5	4-Φ19	185	146	4-Φ18
100	350	352.4	350	220	180	8-Φ19	229	190.5	8-Φ19	215	178	4-Φ18
125	390	416	400	250	210	8-Φ19	254	216	8-Φ22	-	-	-
150	440	470	480	285	240	8-Φ23	279	241.5	8-Φ22	280	235	8-Φ18
200	540	543	600	340	295	8-Φ23/12-Φ23	343	298.5	8-Φ22	335	292	8-Φ18
250	660	660.4	730	395/405	350/355	12-Φ23/12-Φ28	406	362	12-Φ25	405	356	8-Φ22
300	720	762	850	445/460	400/410	12-Φ23/12-Φ28	483	432	12-Φ25	455	406	12-Φ22
350	-	946.3	980	505/520	460/470	16-Φ23/16-Φ28	533	476	12-Φ28	525	470	12-Φ26
400	-	1079	1100	565/580	515/525	16-Φ28/16-Φ31	597	540	16-Φ28	580	521	12-Φ26
450	-	1168	1200	615/640	565/585	20-Φ28/20-Φ31	635	578	16-Φ32	640	584	12-Φ26
500	-	1275	1250	670/715	620/650	20-Φ28/20-Φ34	699	635	20-Φ32	705	641	16-Φ26

pressure reducing valve

HC-50902

Brass Pressure Reducing Valve **PN25**

Feature & Benifits

- WRAS Certified
- Europe Brass CW617N
- Maximum inlet pressure 25 bar
- Adjustable outlet 0.5 bar to 6 bar
- Nickel plated brass finish
- Two outlet gauge points
- Maximum inlet tempreture

Test Pressure & Temperature

Tempreture	Hydraulic
-10°C to 85°C	Shell: 37.5 bar
	Seat: 27.5 bar

Connection Standard

- ISO228-1 parallel thread
- Medium: Water

Materials

NO.	PART	Materials
1	Adjustable Nut	Brass CW617N
2	O-Ring	EPDM
3	Spring	AISI 304
4	Bonnet	Brass CW617N
5	O-Ring	EPDM
6	Screw Rod	Brass
7	O-Ring	EPDM
8	Body	Brass CW617N
9	Gasket	EPDM
10	Plug	Brass
11	Gasket	EPDM
12	End Cap	Brass CW617N

Dimensional Drawing

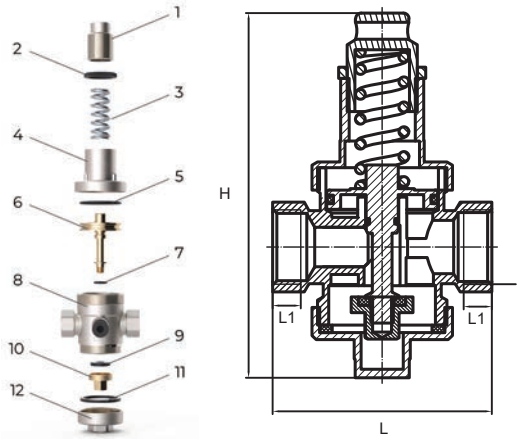

Dimensions

SIZE (inch)	L (mm)	L1 (mm)	H (mm)
1/2"	70	14.5	121
3/4"	80	14.5	121
1"	85	15	141
1 1/4"	105	17	159
1 1/2"	115	18.5	159
2"	120	22	175

commissioning valve

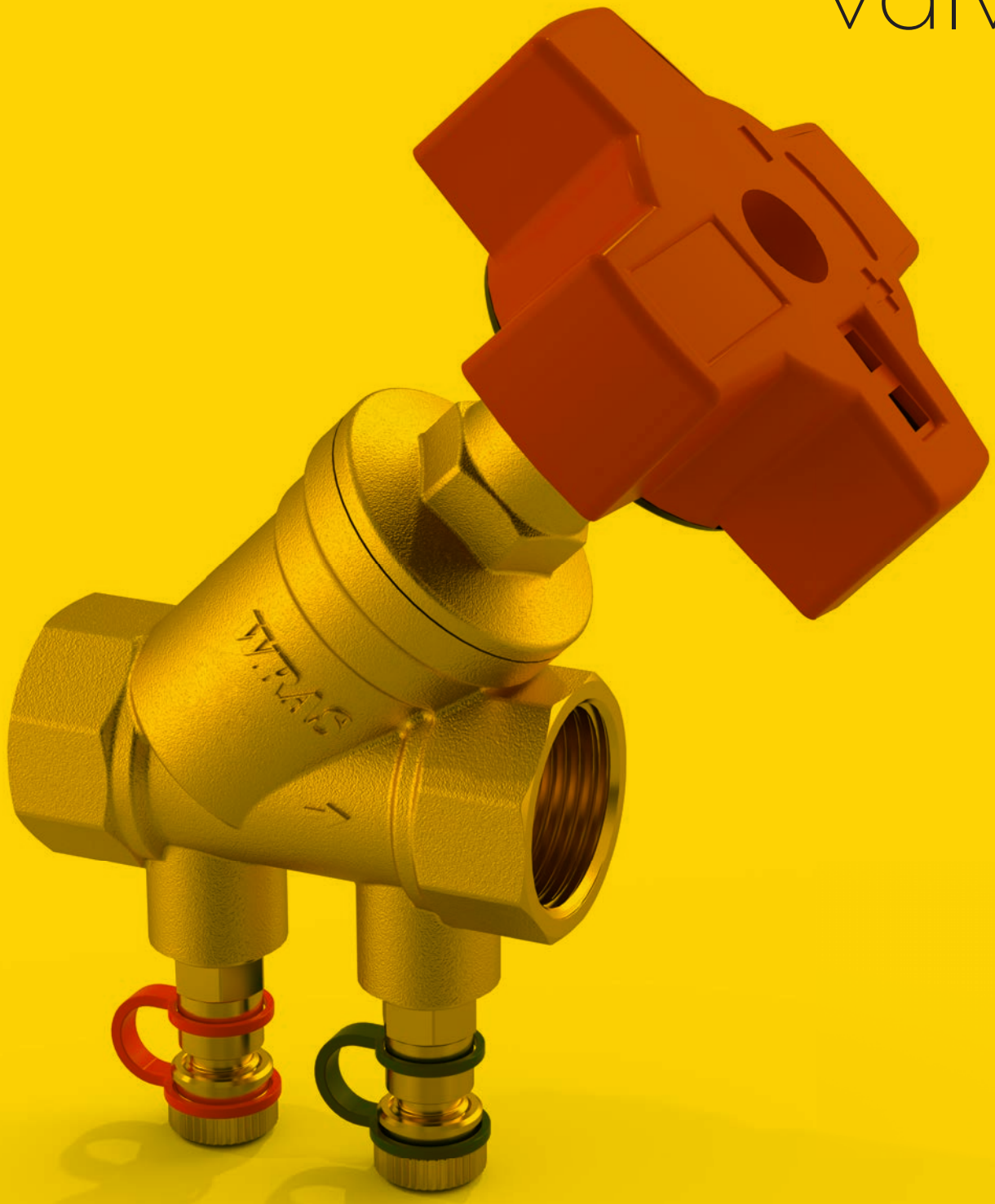

HC-00022

DZR Brass Commissioning Valve **PN20**

Feature & Benifits

- WRAS Certified
- Europe Brass DZR
- Regulation, isolation and flow measurement functions
- Y pattern body
- Handle position indicator
- Meets BS 7350
- Include memory stop

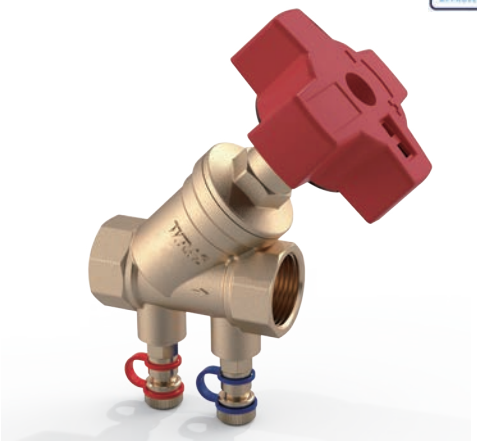

Test Pressure & Temperature

Tempreture	Hydraulic
-10°C to 85°C	Shell: 30 bar
	Seat: 22 bar

Connection Standard

- ISO228-1 parallel thread
- Medium: Water

Materials

NO.	PART	Materials
1	Body	DZR BRASS
2	Water Stop Plate	DZR BRASS
3	Stem	DZR BRASS
4	Valve Cover	DZR BRASS
5	O-Ring	EPDM
6	O-ring	EPDM
7	Screw	304
8	Hand Wheel	ABS
9	Phillips flat head screws	AISI 304
10	Color Buckle	ABS
11	Connector (blue)	DZR BRASS
12	Connector (red)	DZR BRASS

Dimensional Drawing

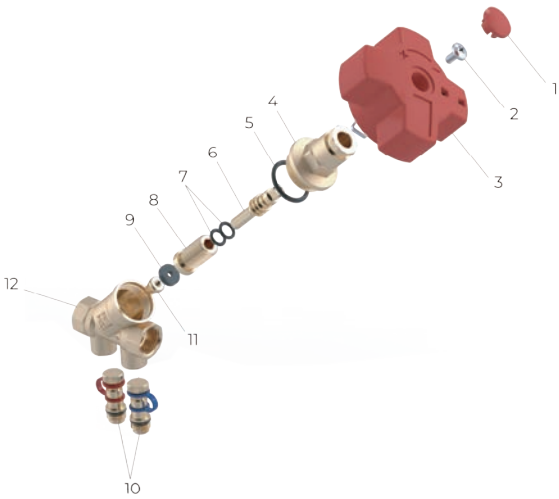

Installation Dimensions

SIZE (inch)	L (mm)	H (mm)	B (mm)	C (mm)	EN (mm)	F	D (mm)	E (mm)
1/2"	59	88	11	70	25	G1/4"	14	36
3/4"	69	93	13	70	31	G1/4"	14	36
1"	90	99	18	70	38	G1/4"	14	36

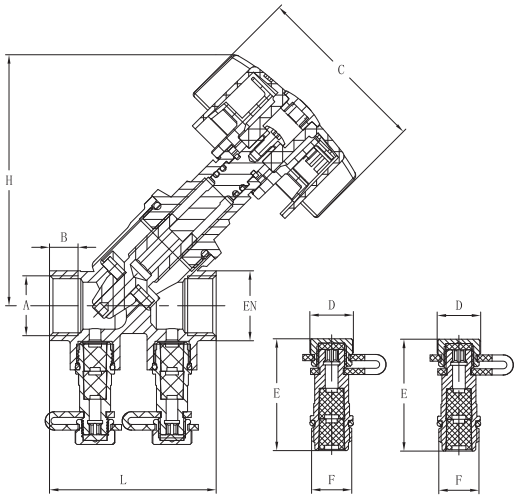

HC-5000Y

Bronze Commissioning Valve **PN25**

Feature & Benifits

- Robust and high quality bronze body with integral seating surfaces.
- Regulation , isolation and flow measurement functions
- Y pattern body
- Handle position indicator
- Meets BS 7350
- Include memory stop
- Include test points

Test Pressure & Tempreture

Tempreture	Hydraulic
-20°C to 120°C	Shell: 37.5 bar
	Seat: 27.5 bar

Connection Standard

- ISO228-1 parallel thread
- Medium: Water

Material

NO.	Part	Material
1	Body	Bronze C83600
2	Brass Ring	Brass
3	Lower Stem Nut	Brass
4	Lower Seal Gasket	PTFE(M111)
5	DISC	Brass
6	Stem	Brass
7	Stem Nut	Brass
8	O-Ring	EPDM
9	Bonnet	Brass
10	Circlip	SS304
11	Stem Set	Brass
12	Flange Nut	Brass
13	Set Screw	SS304
14	Handlewheel	Assembly
15	Test Cock	Assembly

Dimensions

SIZE (inch)	L (mm)	L1 (mm)	H (mm)	d (mm)	d1 (mm)
1/2"	88	18	102	9	10
3/4"	96	21	105	13	14
1"	100	22	125	17	18
11/4"	114	25	129	23	25
11/2"	125	23	140	29	32
2"	146	30	142	39	39

Dimensional Drawing

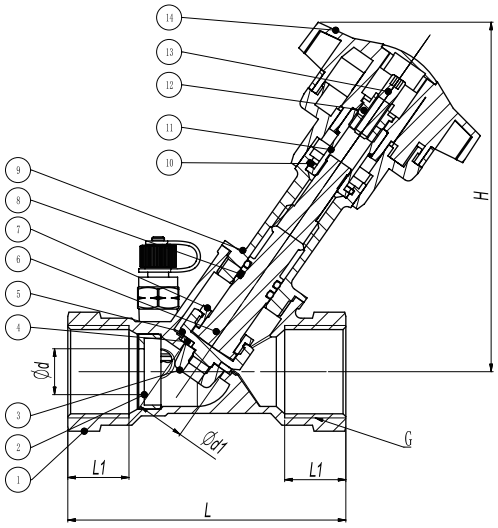

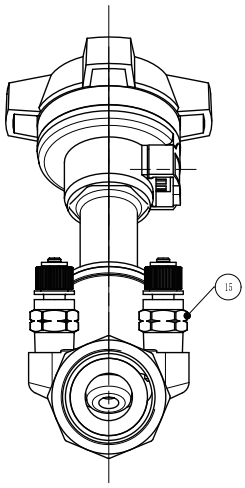

HC-05022

DZR Brass Test points

Feature & Benifits

- Europe Brass DZR
- Self sealing

Connection Standard

- ISO 7-1 R thread

Material

NO.	Part	Material
1	Pressure joint	DZR CZ132
2	Rubber plug	EPDM
3	Lock cap	CW602N
4	O-Ring	EPDM
5	Gasket	EPDM
6	Connective band	PVC

Dimensional Drawing

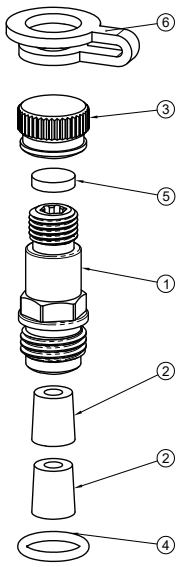

Dimensions

SIZE (inch)	D (mm)	d	H (mm)	L (mm)
1/4"	14	G1/4"	36	10
1/2"	14	G1/2"	72	10

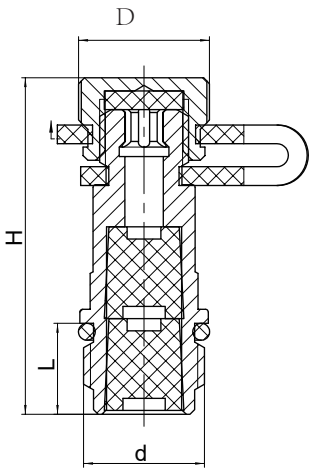

globe valve

HC-13602

Bronze Globe Valve **150 Lbs**

Feature & Benifits

- Robust and high quality bronze body with integral seating surfaces.
- Renewable PTFE seat disc
- female ends
- BS 5154 series B
- Rising stem
- Gland packed

Test Pressure & Tempreture

Tempreture	Hydraulic
-20°C to 120°C	Shell: 225 Lbs
	Seat: 165 Lbs

Material

NO.	Part	Material
1	Body	Bronze C83600
2	Gate	Bronze C83600
3	Seal Ring	PTFE
4	Bonnet	Bronze C83600
5	Packing Gland	Graphite
6	Brass Ring	Brass
7	Gland Nut	Brass
8	Stem	Brass
9	Handlewheel	Cast Iron
10	Name Plate	Aluminum
11	Handle Nut	Q235

Dimensions

SIZE	NPT	d (mm)	L1 (mm)	L (mm)	D (mm)
15	1/2NPT	13	14	48	58
20	3/4NPT	18	14	51	65
25	1NPT	23	18	60	77
32	11/4NPT	32	19	68	77
40	11/2NPT	38	18	71	97
50	2NPT	49	21	76	110

Connection Standard

- US END CONNECTION: ANSI B1.20.1
- ISO228-1 parallel thread
- Medium: Water

Dimensional Drawing

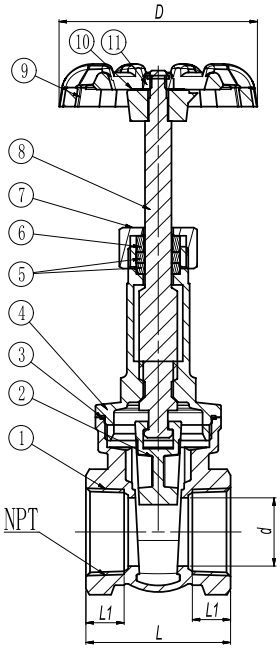

Pressure & temperature ratings

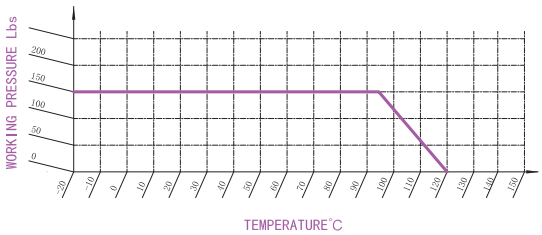

HC-13612

Bronze Globe Valve **PN 25**

Feature & Benifits

- Robust and high quality bronze body with integral seating surfaces.
- Renewable non-metallic seat disc
- Female ends
- PTFE gland packed

Test Pressure & Tempreture

Tempreture	Hydraulic
-20°C to 120°C	Shell: 37.5 bar
	Seat: 27.5 bar

Material

NO.	Part	Material
1	Nut	304 SS
2	Plate	304 SS
3	Lower Seal Gasket	PTFE
4	O-Ring	EPDM
5	Body	Bronze C83600
6	DISC	Brass
7	Seal Ring	PTFE
8	Bonnet	Bronze
9	Stem	Brass
10	Packing Gland	PTFE
11	Brass Ring	Brass
12	Gland Nut	Brass
13	Name Plate	AL
14	Handle Nut	304 SS
15	Handlewheel	HT200

Connection Standard

- ISO228-1 parallel thread
- Medium: Water

Dimensional Drawing

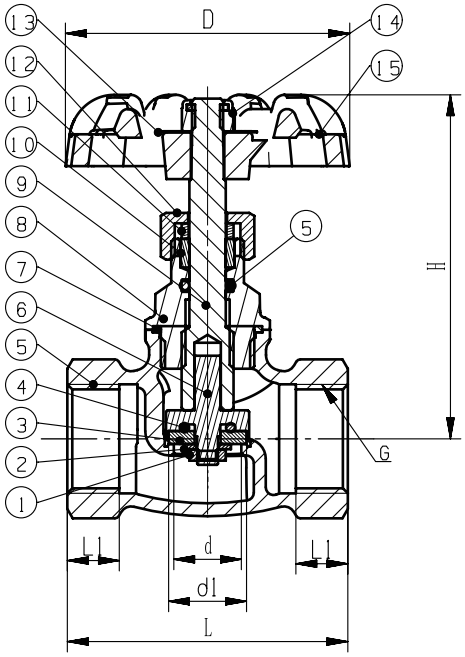

Dimensions

SIZE (inch)	L (mm)	L1 (mm)	H (mm)	d (mm)	d1 (mm)
1/2"	54	10	67	Φ13	Φ15
3/4"	58	11	67	Φ13	Φ15
1"	66	12	86.5	Φ18.5	Φ21
1-1/4"	75	14.5	86.5	Φ23	Φ25.5
1-1/2"	85	15	97	Φ31	Φ33.5
2"	101	17	109	Φ37	Φ39.5

Pressure & temperature ratings

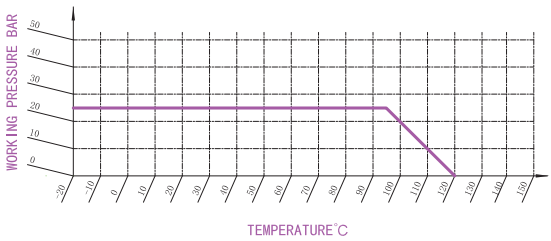

automatic air vent

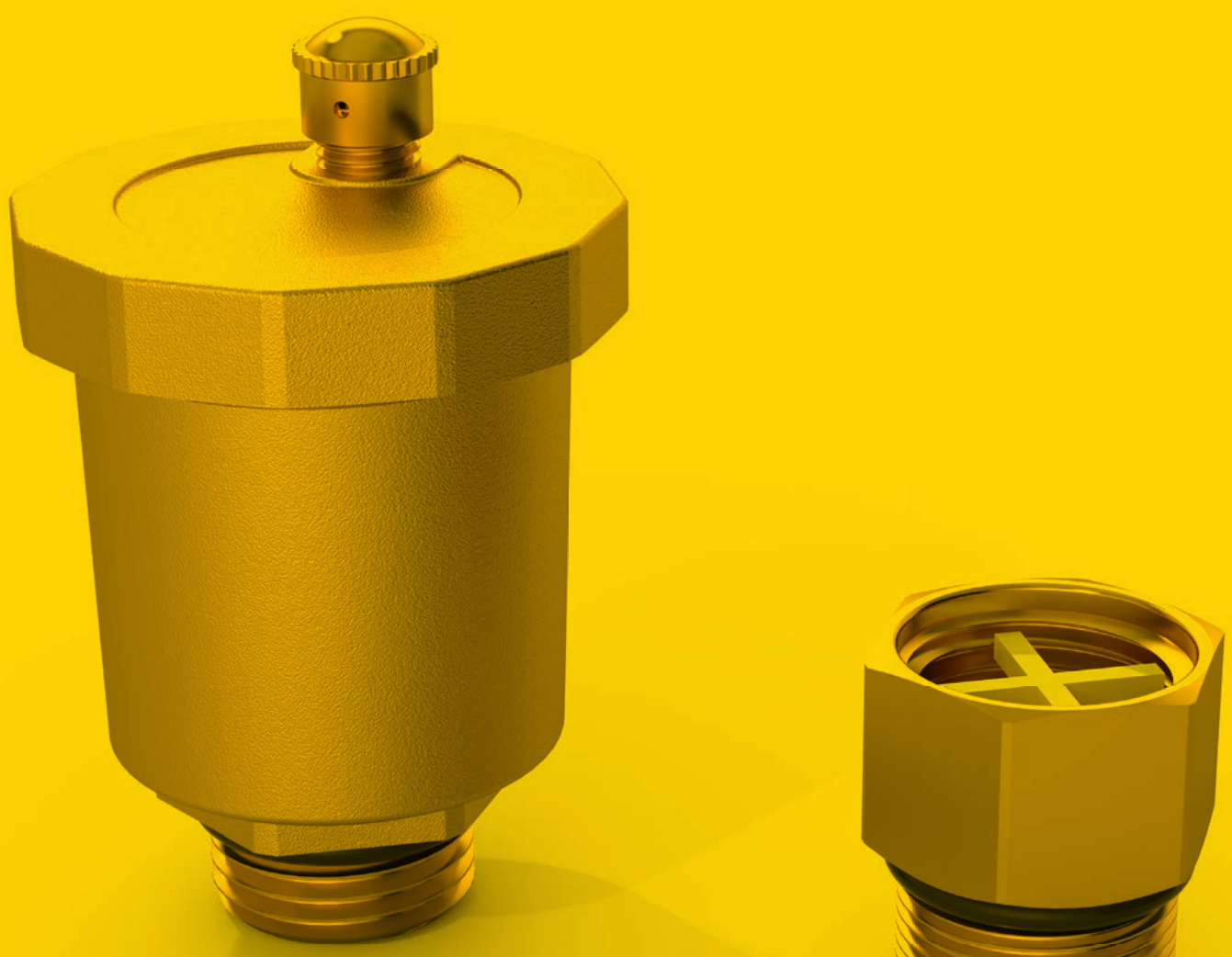

HC-21041

Brass Automatic Air Vent

PN10

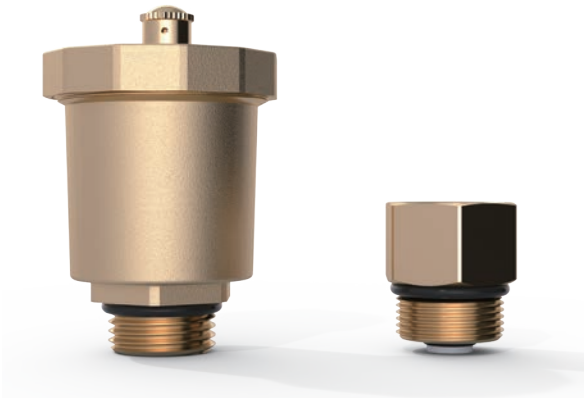

Feature & Benifits

- Europe brass CW617N
- Removes inevitable potentially dangerous air trapped in system
- Simplifies the venting process
- Saves time and costs
- A shut-off valve option is available in size 1/2 "& 3/8"
- Conforms to design standard BS EN 1074-4

Test Pressure & Temperature

Tempreture	Hydraulic
-20°C to 120°C	Shell: 24 bar
	Seat: 17.5 bar

Connection Standard

- ISO228-1 parallel thread
- Medium: Water

Materials

NO	PART	Materials
1	Big Cap	Brass CW617N
2	Rubber Washer	EPDM
3	Air Relief Nozzle	Brass CW617N
4	End Cap	Brass CW617N
5	O-Ring	EPDM
6	Washer	Steel
7	Spring	Steel
8	Core	POM
9	Spring Spool Holder	POM
10	Float	PP
11	Body	Brass CW617N
12	O-Ring	EPDM
13	Adapter	Brass CW617N
14	Core	POM
15	O-Ring	EPDM
16	Spring	Steel
17	O-Ring	EPDM

Dimensional Drawing

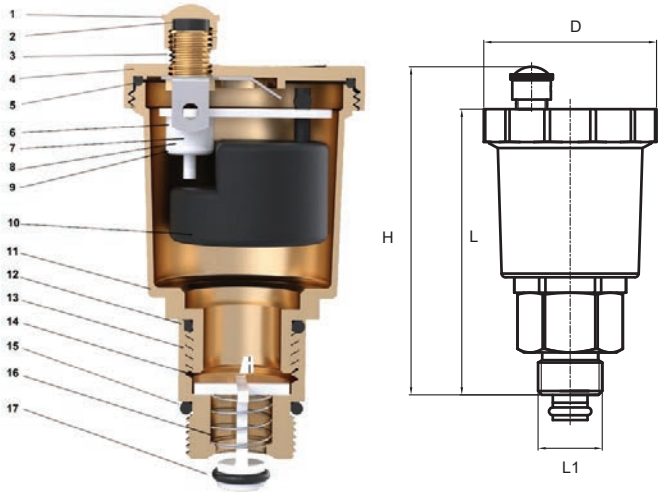

Installation Dimensions

SIZE (inch)	L (mm)	L1 (mm)	H (mm)	D (mm)
3/8"	74	3/8	85	44.8
1/2"	74	1/2	85	44.8

HC-50002

Bronze Automatic Air Vent

PN 10

Feature & Benifits

- Robust and high quality bronze body with integral seating surfaces.
- Removes inevitable potentially dangerous air trapped in system
- Simplifies the venting process
- Saves time and costs
- A shut-off valve option is available in size 1/2 "& 3/8"
- Conforms to design standard BS EN 1074-4.

Test Pressure & Tempreture

Tempreture	Hydraulic
-20°C to 120°C	Shell: 24 bar
	Seat: 17.5 bar

Connection Standard

- ISO228-1 parallel thread
- Medium: Water

Material

NO.	Part	Material
1	Body	Bronze C83600
2	O-Ring	EPDM
3	Assembly	/
4	Bonnet	Bronze C83600
5	O-Ring	EPDM
6	Plug	Brass

Dimensional Drawing

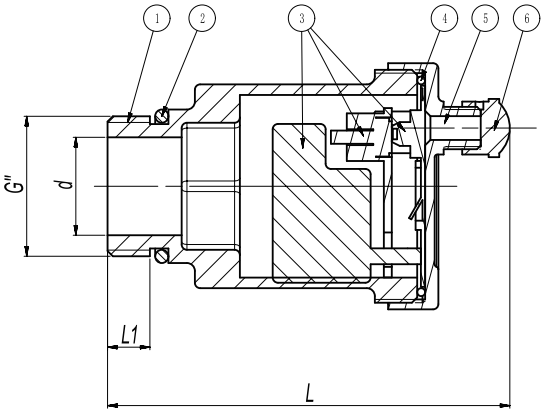

Dimensions

SIZE (inch)	L (mm)	L1 (mm)	d (mm)	G
1/2"	74	9	15	1/2"
3/4"	74	8	19	3/4"
1"	73	9	23	1"

HC-93401 & HC-93101

Single Air Release Valve-Thread Type ***PN16***

Feature & Benifits

- Ductile Iron body
- Internally and externally fusion bonded epoxy coated
- WRAS approved coating
- WRAS approved Non-metal parts
- Robust and high quality bronze body with integral seating surfaces.

HC-93401

TYPE A: Thread Type

HC-93101

TYPE B: Flange Type

Test Pressure & Tempreture

Tempreture	Hydraulic
0°C to 80°C	Shell: 24 bar
	Seat: 17.6 bar

Connection Standard

- ISO228-1 parallel thread
- Medium: Water

Material

NO.	Part Name	Material	Standard
1	Body	Ductile Iron	DIN1693/DIN1563
2	Screen	X5CrNi18-10/SS304	EN10088-1/ASTM A959
3	Cover	Ductile Iron	DIN1693/BS EN1563
4	Plug	Brass/CS/SS	EN10083-2/ASTM A959
5	Cover Gasket	EPDM/NBR	ISO4633
6	Cover Gasket	Graphite With Soft Steel	
7	Bolt	C45E/1045	EN10083-2/ASTM A29

Dimensional Drawing

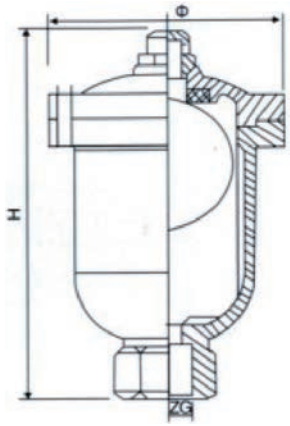

TYPE A: Thread Type

Dimensions

DN	D	D1	D2	D3	H	n-d
50	165	125	102	175	270	4-Φ19
80	200	160	135	215	300	8-Φ19
100	220	180	158	230	310	8-Φ19
150	285	240	212	265	395	8-Φ23
200	340	295	268	380	455	8-Φ23

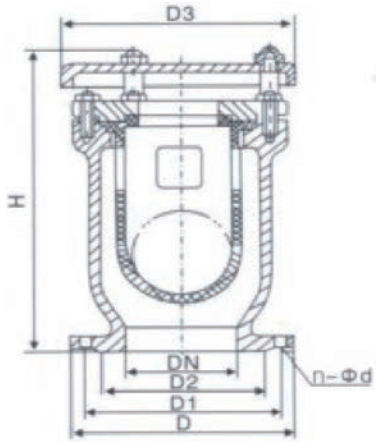

TYPE B: Flange Type

HC-93201 & HC-93301

Double Orifice Air Release Valve-Thread Type ***PN10/PN16***

Feature & Benifits

- Ductile Iron body
- Internally and externally fusion bonded epoxy coated
- WRAS approved coating
- WRAS approved Non-metal parts

HC-93201 **HC-93301**

TYPE A: Flange Type **TYPE B: Thread Type**

Test Pressure & Tempreture

Tempreture	Hydraulic
0°C to 80°C	Shell: 24 bar
	Seat: 17.6 PSI

Connection Standard

- BSPTaper (ISO7/1) or NPT (ANSI B1.20.1
- End flange: EN1092-2, ASME B16.1/16.42,AS4087

Material

NO.	Part Name	Material
1	Copper Air Valve	Brass
2	Bolt	Carbon Steel
3	Bonnet	Ductile Iron
4	Ball	ABS/Rubber/SS
5	Seat Gasket	EPDM
6	Basket	POLY
7	Body	Ductile Iron

Dimensional Drawing

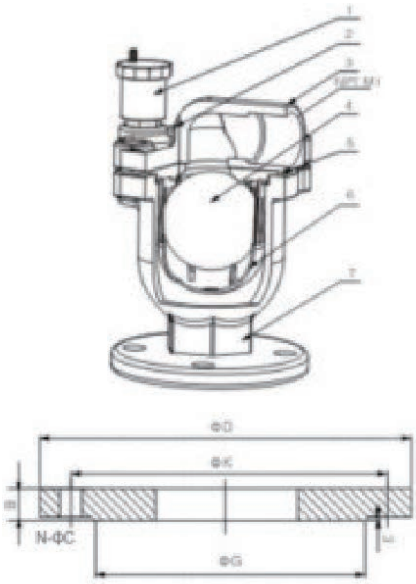

TYPE A: Flange Type

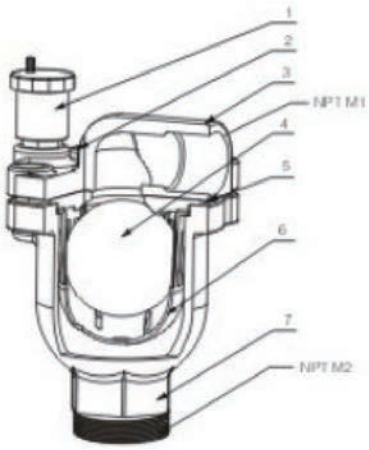

TYPE B: Thread Type

Dimensions

DN	B	ΦD	ΦK	ΦG	N-ΦC
20	16	105	75	58	4-Φ14
25	16	115	85	68	4-Φ14
32	18	140	100	78	4-Φ19
40	18	150	110	88	4-Φ19
50	19	165	125	102	4-Φ19
80	20	200	160	138	8-Φ19
100	20	220	180	158	8-Φ19

hose bibs

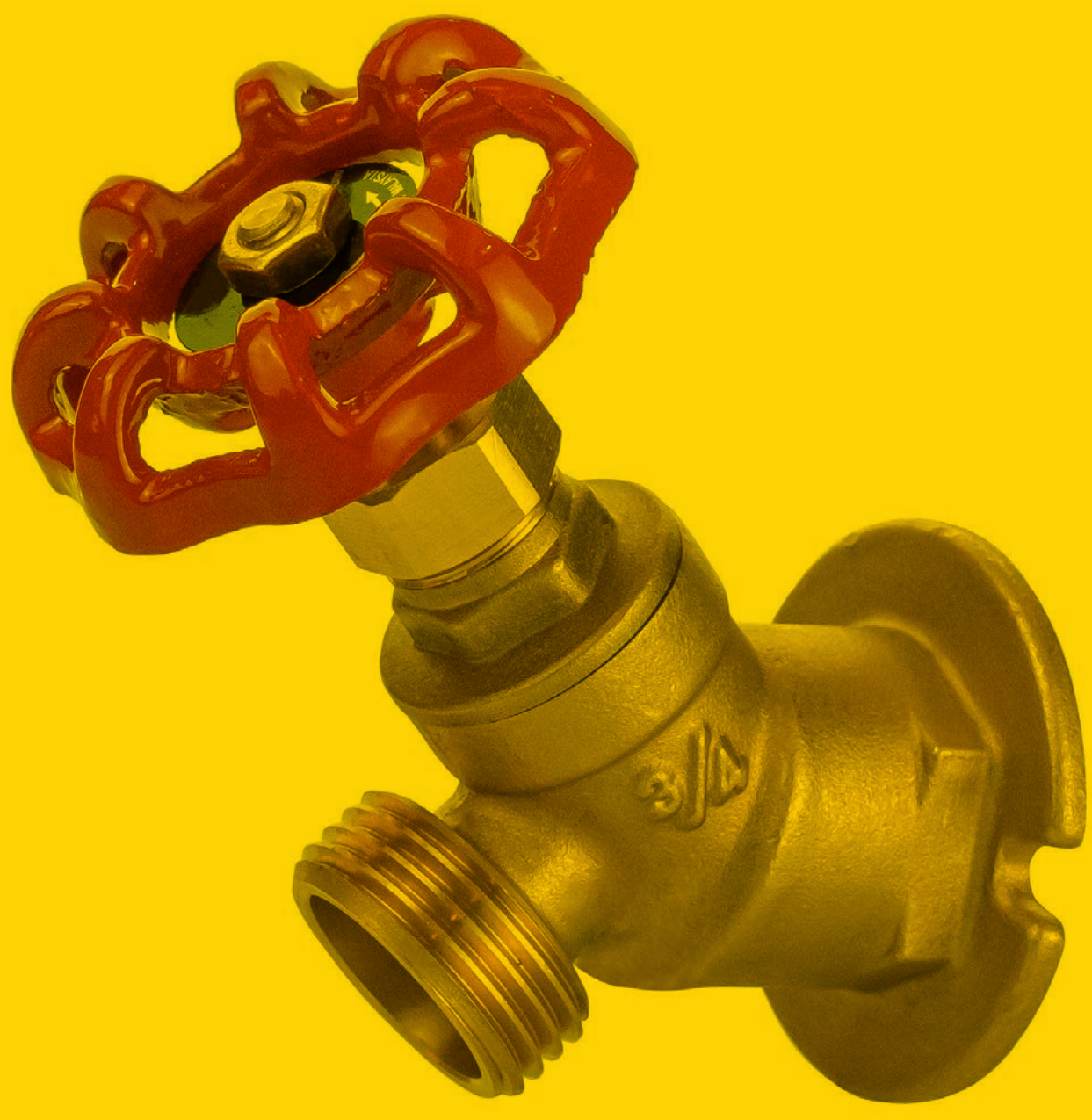

HC-32001

Brass Bibcock with Lever Handle **PN20**

Feature & Benifits

- Europe Brass CW617N
- Hose union connection
- Water and oil service
- Fixed to stand wall plate elbows

Test Pressure & Temperature

Tempreture	Hydraulic
0°C to 100°C	Shell: 30 bar
	Seat: 22 bar

Connection Standard

- US END CONNECTION: ANSI B1.20.1
- ISO228-1 parallel thread
- Medium: Water

Materials

NO.	PART	Materials
1	Nut	Steel
2	Handle	Steel
3	Cap	Brass
4	Seats	PTFE
5	Stem	Brass
6	Body	Brass CW617N
7	Seats	PTFE
8	Washer	EPDM
9	Outlet	Brass
10	Bonnet	Brass
11	Ball	Brass
12	Seats	PTFE
13	Union	Brass CW617N

Dimensional Drawing

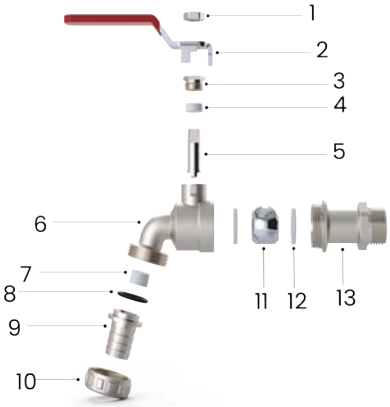

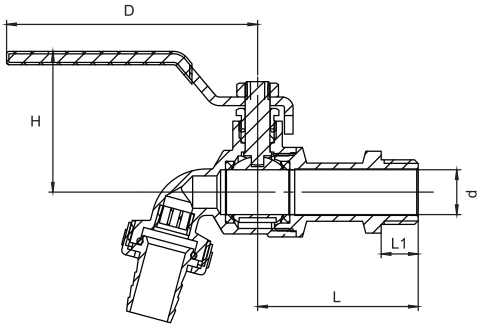

Installation Dimensions

SIZE (inch)	L (mm)	L1 (mm)	H (mm)	d (mm)	D (mm)
1/2"x3/4"	52	12	45.6	14.5	81.3
3/4"x1"	57	13.5	49.7	18	104

Pressure & temperature ratings

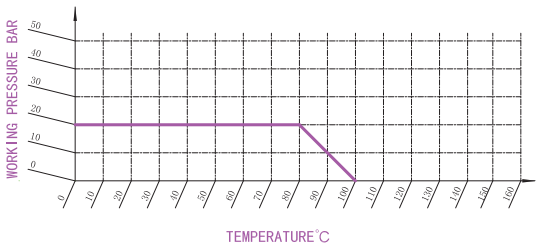

HC-99011 DR

Brass Bibcock with Lever Handle **PN20**

Feature & Benifits

- Europe Brass DZR
- Hose union connection
- Water and oil service
- Fixed to stand wall plate elbows
- CW617N material is available, item No. HC-99011

Test Pressure & Temperature

Tempreture	Hydraulic
0°C to 100°C	Shell: 30 bar
	Seat: 22 bar

Materials

NO.	PART	Materials
1	Handle	Steel
2	Bolt	Stainless Steel 304
3	Stem	Brass
4	O-Ring	EPDM
5	Body	DZR CW602N
6	Seats	PTFE
7	Washer	EPDM
8	Outlet	Stainless steel 304
9	Bonnet	Brass
10	Ball	Brass
11	Seats	PTFE
12	Union	DZR CW602N

Installation Dimensions

SIZE (inch)	D (mm)	H (mm)	d (mm)
1/2"x3/4"	86	43	10
3/4"x1"	86	44.6	12
1"x11/4"	112	54.4	13.5

Connection Standard

- ISO228-1 parallel thread
- Medium: Water

Dimensional Drawing

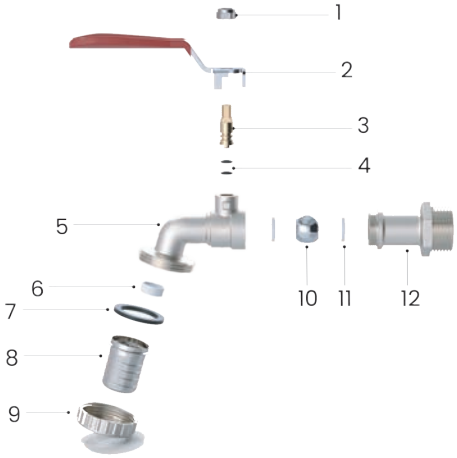

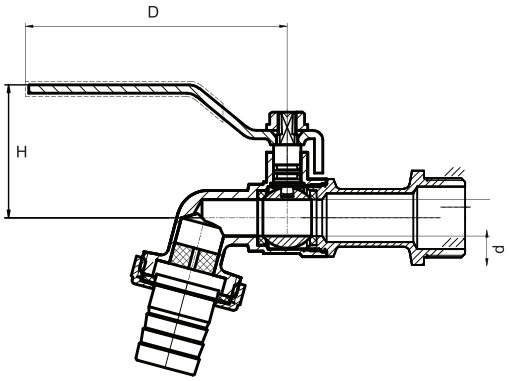

Pressure & temperature ratings

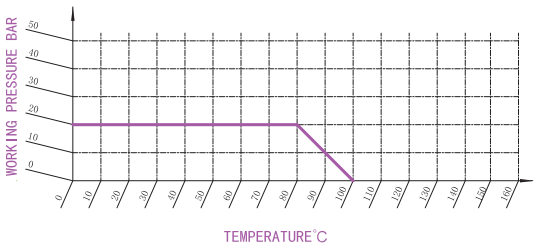

HC-10322

DZR Brass Hose Bibs

125PSI

Feature & Benifits

- CSA approved for use on wholesome(portable) water in sizes 1/2"- 3/4"
- Leadfree Brass
- Design standard:CSA B125.1-11 Standard

Test Pressure & Tempreture

Tempreture	Hydraulic
5°C to 90°C	Shell: 500 PSI
	Seat: 125 PSI

Connection Standard

- US END CONNECTION: ANSI B1.20.1
- Medium: Water

Material

NO.	Part	Material
1	Body	C46500
2	Bonnet	C46500
3	Gasket	PTFE
4	Stem	Brass
5	gland	EPDM
6	gland	EPDM
7	Adjustable nut	Brass
8	Handle	Cast Iron
9	Nameplate	Aluminum
10	Nut	Q235

Dimensional Drawing

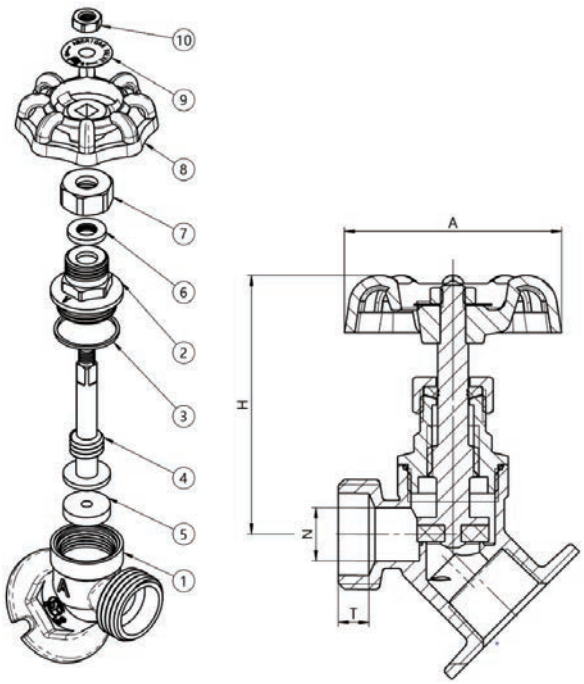

Dimensions

SIZE (inch)	H (mm)	A (mm)	N (mm)	T (mm)
1/2"x3/4"	63	53	13	8
3/4"x3/4"	63	53	13	8

Pressure & temperature ratings

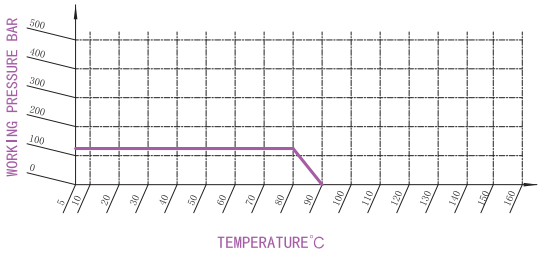

HC-25102

Lead Free Hose Bibs **125PSI**

Feature & Benefits

- CSA approved for use on wholesome(portable) water in sizes 1/2"- 3/4"
- Leadfree Brass
- Design standard:CSA B125.1-11 Standard

Test Pressure & Tempreture

Tempreture	Hydraulic
5°C to 90°C	Shell: 500 PSI
	Seat: 125 PSI

Connection Standard

- US END CONNECTION: ANSI B1.20.1
- Medium: Water

Materials

NO.	PART	Materials
1	Nut	Q235
2	Name plate	Aluminum
3	Handwheel	Cast Iron
4	Adjustable nut	Brass
5	Rubber washer	EPDM
6	Washer	304
7	Stem	Brass
8	Rubber washer	EPDM
9	Body	C46500

Dimensional Drawing

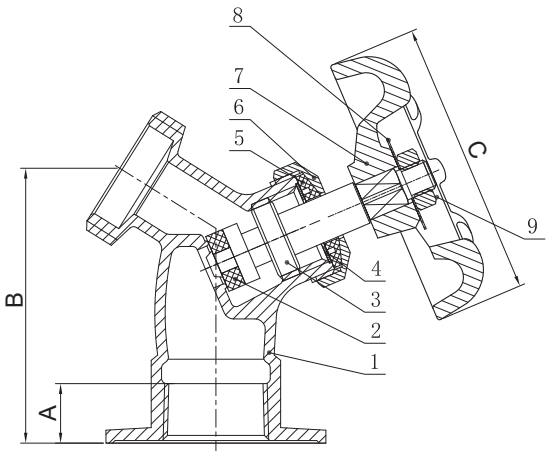

Dimensions

DN	A	B	C
15	12	53	58
20	17	53	58

Pressure & temperature ratings

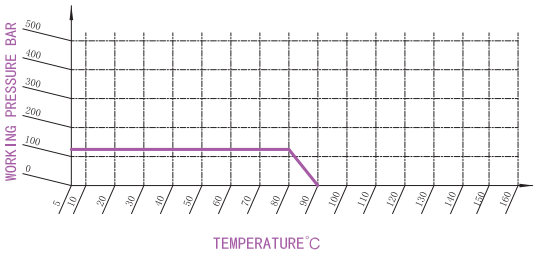

HC-20902

Lead Free Brass Hose Bibs **125PSI**

Feature & Benefits

- CSA approved for use on wholesome(portable) water in sizes 1/2"- 3/4"
- Multi Turn
- Rough Brass
- Zinc T- handle

Test Pressure & Tempreture

Tempreture	Hydraulic
5°C to 90°C	Shell: 500 PSI
	Seat: 125 PSI

Connection Standard

- US END CONNECTION: ANSI B1.20.1
- Medium: Water

Dimensional Drawing

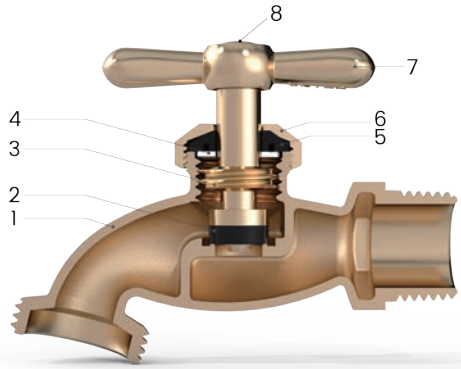

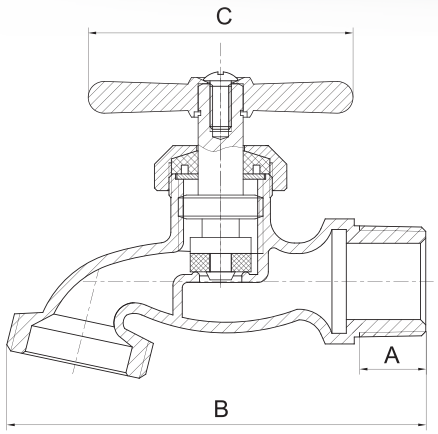

Materials

NO.	PART	Materials
1	Screw	304
2	Handle	ZN
3	Adjustable nut	Brass
4	Rubber washer	EPDM
5	Washer	304
6	Stem	Brass C46500
7	Rubber washer	EPDM
8	Body	Brass C46500

Dimensions

DN	A	B	C
15	14	85	50
20	14	89	52

Pressure & temperature ratings

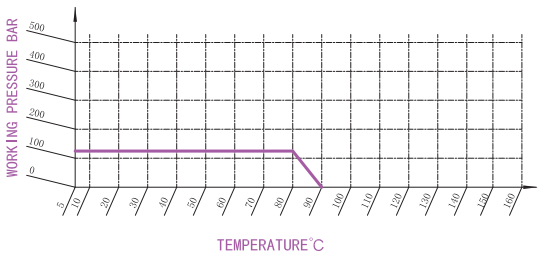

HC24.10001

Vacuum Breakers **125PSI**

Feature & Benefits

- It is a tamper-proof vacuum breaker - to fix in between bib tap union connection and the hose union nozzle components.
  Under normal piping conditions, the inner diaphragm opens to permit generous flow, while the circumferential diaphragm closes the air vents.
  Then when should supply pressure drop and a backflow begin, the inner diaphragm immediately closes to prevent backflow into the main line, while the circumferential diaphragm opens the air vents to break the vacuum.

Materials

NO.	PART	Materials
1	Body	C46500
2	Seal	PTFE
3	Tamper-Proof nut	Brass
4	Piston's guide	Brass
5	Spring	SS304
6	Gasket	EPDM

Connection Standard

- US END CONNECTION: ANSI B1.20.1
- Medium: Water

Installation Dimensions

SIZE (mm)	Dimensions	
	A	B
3/4"HT	36	35

Dimensional Drawing

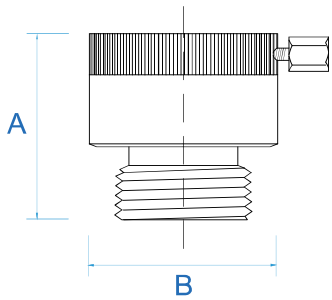

Characteristic Curve

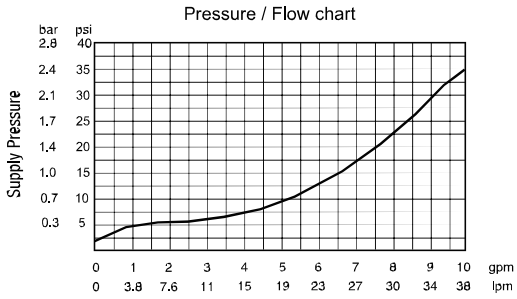

HC-20302T

DZR Brass Bibcock with Check Valve **PN16**

Feature & Benefits

- WRAS certified
- Europe Brass DZR
- BS1010-2 standards
- Brass Hose Union Bib Tap with Double Check Valve - includes nut and tail.
- Suitable for cold water systems.

Test Pressure & Temperature

Tempreture	Hydraulic
5°C to 90°C	Shell: 24 bar
	Seat: 17.6 bar

Connection Standard

- ISO228-1 parallel thread
- Medium: Water

Materials

NO.	PART	Materials
1	Screw	Brass
2	Handle	Brass
3	Lock cap	Brass
4	Flat Washer	PTFE
5	Bonnet	DZR Brass
6	Seats	PTFE
7	Stem	Brass
8	Washer	EPDM
9	Body	DZR Brass
10	Anti-return core	/
11	O-ring	EPDM
12	Nozzle	Brass
13	Pressing Nut	Brass
14	O-ring	EPDM
15	Screw	Brass
16	Anti-return core	/
17	Internal circlips	Steel

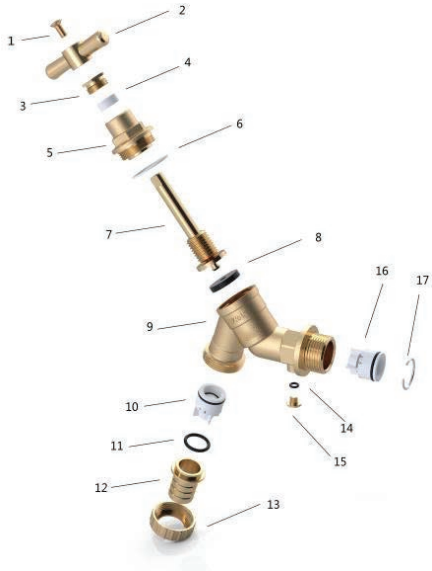

Dimensional Drawing

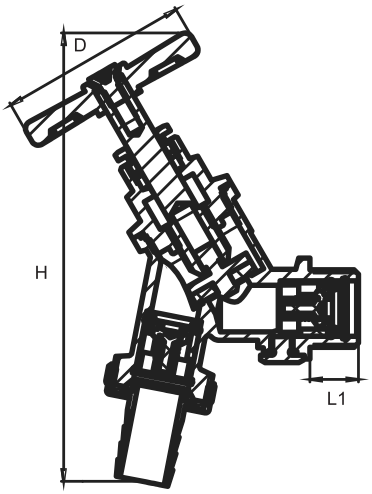

Installation Dimensions

SIZE (inch)	L1 (mm)	H (mm)	D (mm)
1/2"	13	74	69
3/4"	15	74.3	105

Pressure & temperature ratings

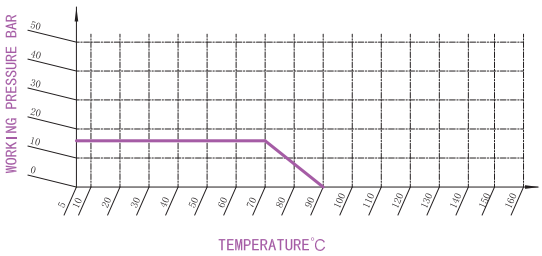

HC-20302W

DZR Brass Bibcock without Check Valve **PN16**

Feature & Benifits

- WRAS certified
- Europe Brass DZR
- BS1010-2 standards
- Brass Hose Union Bib Tap - includes nut and tail.
- Suitable for cold water systems.

Test Pressure & Tempreture

Tempreture	Hydraulic
5°C to 90°C	Shell: 24 bar
	Seat: 17.6 bar

Connection Standard

- BISO228-1 parallel thread
- Medium: Water

Material

NO.	Part	Material
1	Body	DZR
2	Gasket	EPDM
3	Stem	Brass
4	Washer	PTFE
5	Bonnet	CZ132
6	Gland	PTFE
7	Adjustable Nuts	Brass
8	Handle	Cast Iron
9	Nameplate	Aluminum
10	Nut	Brass
11	Anti-return Part	/
12	Circlip	304
13	O-Ring	EPDM
14	Outlet	Brass
15	Nut	Brass
16	O-Ring	EPDM
17	Hexagon Screw	Brass

Dimensional Drawing

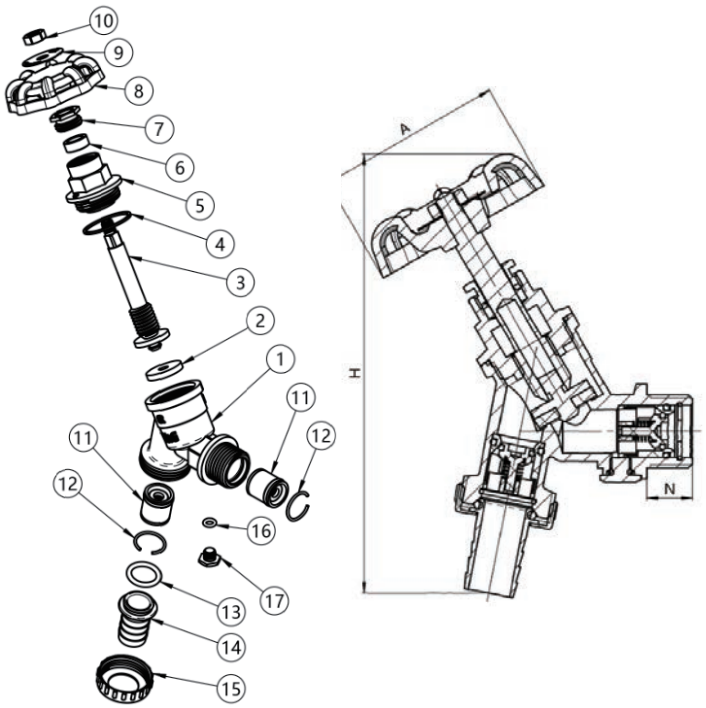

Dimensions

SIZE (inch)	H (mm)	N (mm)	A (mm)
1/2"	126	13	53
3/4"	136	15	53

Pressure & temperature ratings

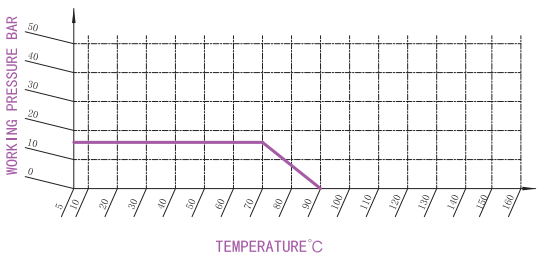

HC-20362

DZR BrassBibcock without Check Valve **PN16**

Feature & Benifits

- WRAS certified
- Europe Brass DZR
- BS1010-2 standards
- Brass Hose Union Bib Tap - includes nut and tail. Suitable for cold water systems.

Test Pressure & Tempreture

Tempreture	Hydraulic
5°C to 90°C	Shell: 24 bar
	Seat: 17.6 bar

Connection Standard

- UK END CONNECTION:Taper threaded to BS EN10226-2(ISO7-1)formerly BS 21
- BS2779 parallel thread
- Medium: Water

Material

NO.	Part	Material
1	Body	DZR brass
2	Gasket	EPDM
3	Stem	/
4	Washer	PTFE
5	Bonnet	DZR brass
6	O-Ring	NBR
7	Gland	PTFE
8	Nut	Brass
9	Key	Brass
10	Handle	Brass
11	Cross screw	Brass
12	Flower Nut	Brass
13	Outlet	Brass
14	O-Ring	EPDM

Dimensional Drawing

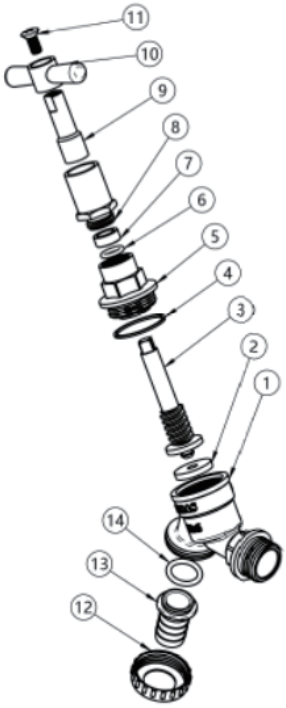

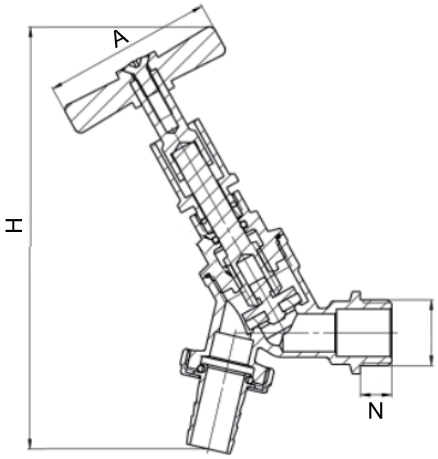

Dimensions

SIZE (inch)	H (mm)	N (mm)	A (mm)
1/2"	134	13	54

Pressure & temperature ratings

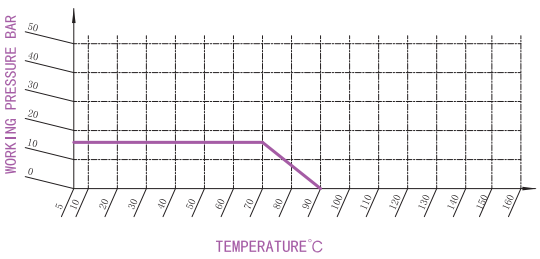

HC-21402

Brass Bibtap **PN16**

Feature & Benifits

- Europe Brass CW617N
- BS 1010

Test Pressure & Temperature

Tempreture	Hydraulic
5°C to 90°C	Shell: 24 bar
	Seat: 17.6 bar

Connection Standard

- UK END CONNECTION:Taper threaded to BS EN10226-2 (ISO7-1) formerly BS 21
- BS2779 parallel thread
- Medium: Water

Materials

NO.	PART	Materials
1	Handle	Brass
2	Lock cap	Brass
3	Flat Washer	PTFE
4	Bonnet	Brass CW617N
5	Seats	PTFE
6	Stem	Brass
7	Washer	EPDM
8	Body	Brass CW617N
9	Washer	PTFE
10	Nozzle	Brass
11	Pressing Nut	Brass

Dimensional Drawing

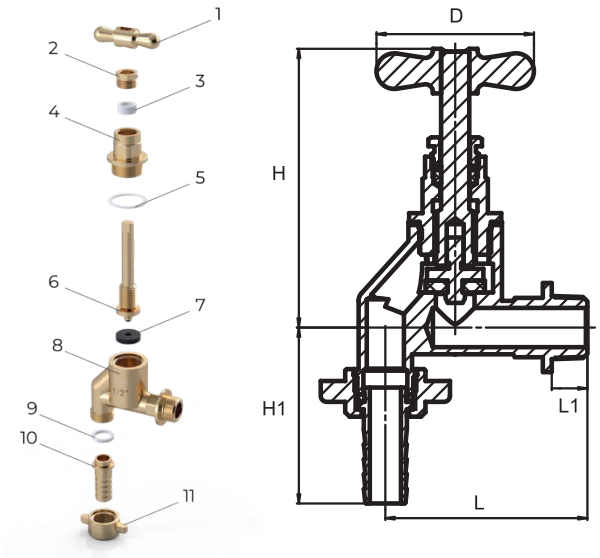

Installation Dimensions

SIZE (inch)	L1 (mm)	L (mm)	H (mm)	H1 (mm)	D (mm)
1/2"	12	68	93.8	59.2	44.5

Pressure & temperature ratings

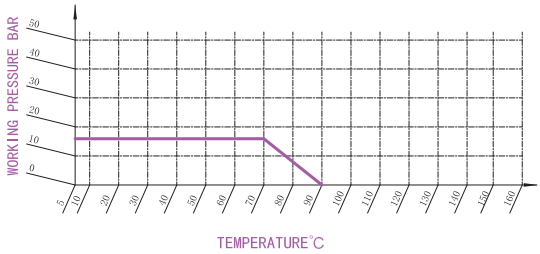

float valve

HC-10172

Brass Float Valve **PN16**

Feature & Benifits

- WRAS certified
- Europe Brass CW617N
- PN14 1” to 2”
- Temperature : -10°C to 85°C
- High pressure

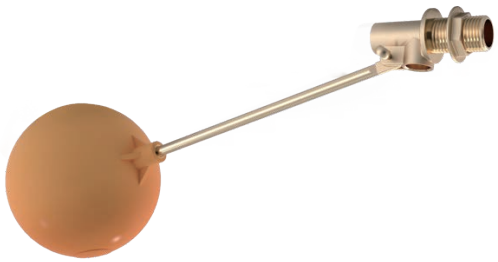

Materials

NO.	PART	MATERIAL
1	Float Ball	PE
2	Connecting Rod	Brass
3	Connecting Rod	Brass
4	Spol	Brass
5	Rubber Mat	NBR
6	Pin	Brass
7	Body	Brass CW617N
8	Flange Nut	Brass

Connection Standard

- ISO228-1 parallel thread
- Medium: Water

Dimensions

Size (mm)	Plastic Ball	G (mm)	A (mm)	L (mm)
15	4 1/2" x 5/16" W	1/2”	304	70.5
20	5” x 5/16” W	3/4”	302	74.5
25	6” x 7/16” W	1”	405	87.5
32	8” x 5/16” W	1 1/4"	435	165.5
40	10” x 9/16” W	1 1/2"	435	168.5
50	12” x 5/8” W	2”	435	168.5

Dimensional Drawing

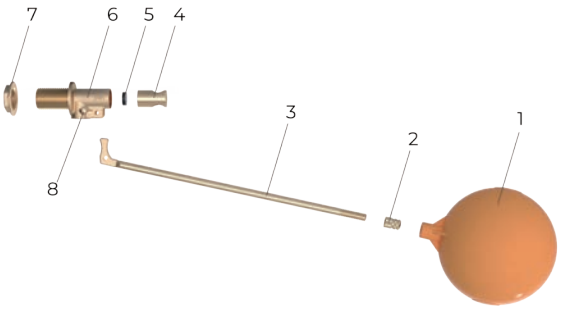

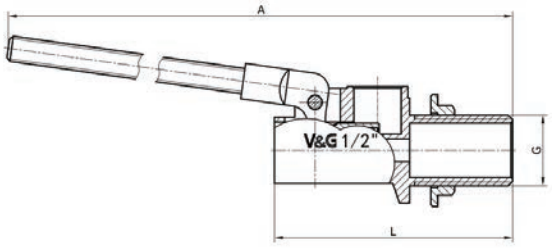

Pressure & temperature ratings

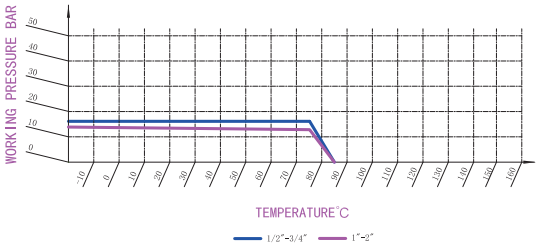

HC-10182&HC-10171

Bronze Float Valve

P16

Feature & Benifits

- Europe Brass CW617N for 1/2" & 3/4" , Bronze for 1" to 6"
- PN14 1" to 2"
- Temperature: -10°C to 85°C
- High pressure

Materials

NO.	PART	Materials
1	Body	Brass 1/2" & 3/4, bronze 1" to 6"
2	Piston	Bronze
3	Seat	Bronze
4	Lever heel	Bronze
5	Piston Washer	EPDM EP70
6	Piston Guide	Bronze
7	Lever Arm	Brass
8	Sealing Washer	EPDM EP70
9	Retaining Washer	Stainless Steel
10	Retaining Bolt	Stainless Steel
11	Lever Nut	Brass
12	Fixed Flange Cknut	Bronze
13	Inlet Shank	Bronze
14	Loose Backnut	Bronze
15	Coupling Nut	Bronze
16	Body Cap	Bronze
17	Split Pin	Brass
18	O-Ring	EPDM

Connection Standard

- ISO228-1 parallel thread
- Medium: Water

Dimensional Drawing

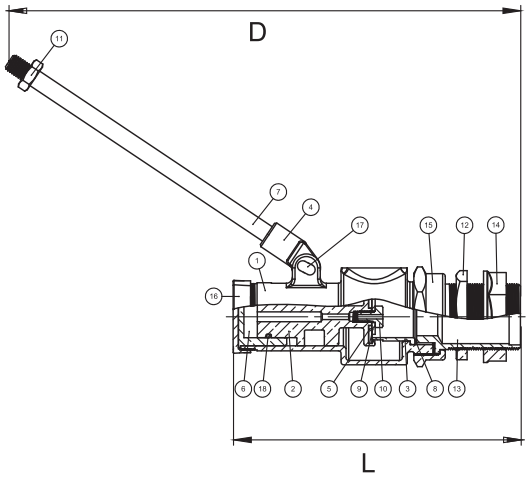

Installation Dimensions

SIZE (inch)	L (mm)	D (mm)	Plastic Ball	Copper Ball
1/2"	103.5	293.5	4 1/2" x 5/16" W	4 1/2" x 5/16" W
3/4"	134	450	5" x 5/16" W	5 1/2" x 3/8" W
1"	159.4	506.4	6" x 7/16" W	6" x 7/16" W
11/4"	209	299	8" x 9/16" W	8" x 9/16" W
11/2"	209	298	10" x 9/16" W	10" x 9/16" W
2"	262	374	12" x 5/8" W	12" x 5/8" W
21/2"	235	473	Not recomended	12" x 9/16" W
3"	277	523	Not recomended	14" x 3/4" W
4"	331	493	Not recomended	15" x 3/4" W
6"	432	541	Not recomended	16" x 7/8" W

Pressure & temperature ratings

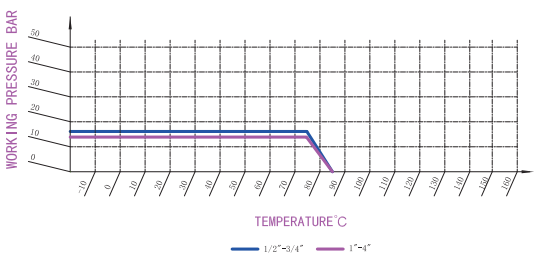

HC-10212

Floats (For Float Valve)

Feature & Benifits

- Plastic or copper ball
- Stud or claw attachment
- Floats (For V&G Float Valve)

Dimensions(Plastic ball)

Range	Connection to lever arm*	Code
4 1/2"x5/16" W	5/16" W	10212.G15
5"x5/16" W	5/16" W	10212.G20
6"x3/8" W	3/8" W	10212.G25
6"x 7/16"W	7/16" W	10212.G25B
8"x9/16" W	9/16 "W	10212.G32
10"x 9/16"W	9/16" W	10212. G40
12"x5/8" W	5/8" W	10212.G50

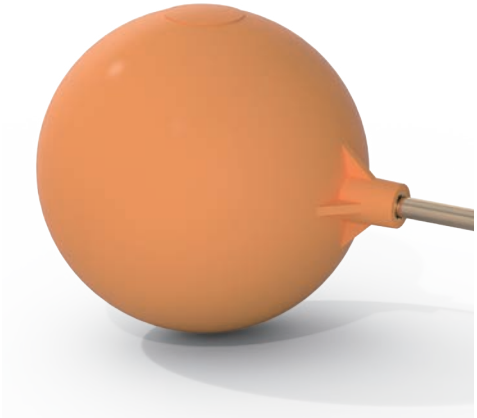

Dimensions(copper ball)

Range	Connection to lever arm*	Code
4 1/2"	5/16" W	10181.G15
5 1/2"	3/8" W	10181.G20
6"	7/16" W	10181.G25
8" W	9/16" W	10181.G32
10" W	9/16" W	10181.G40
12" W	5/8" W	10181.G50
14" W	9/16" W	10181.G65
15" W	3/4" W	10181.G80
16" W	7/8" W	10181.G100

Brass studs for copper floats . suitable for copper float 4 1/2″ to 12″ connection to lever arm

Range	Code
5/16"W	10191.G15
3/8"W	10191.G25
7/16"W	10201.G25
1/2" W	10191.G40
9/16" W	10201.G40
5/8" W	10191.G50

Claws for copper floats . suitable for copper float 12″ to 16″ connection to lever arm

Range	Code
9/16"W	10191.G65
3/4"W	1019`.G80
7/8"W	10191.15G

angle valve

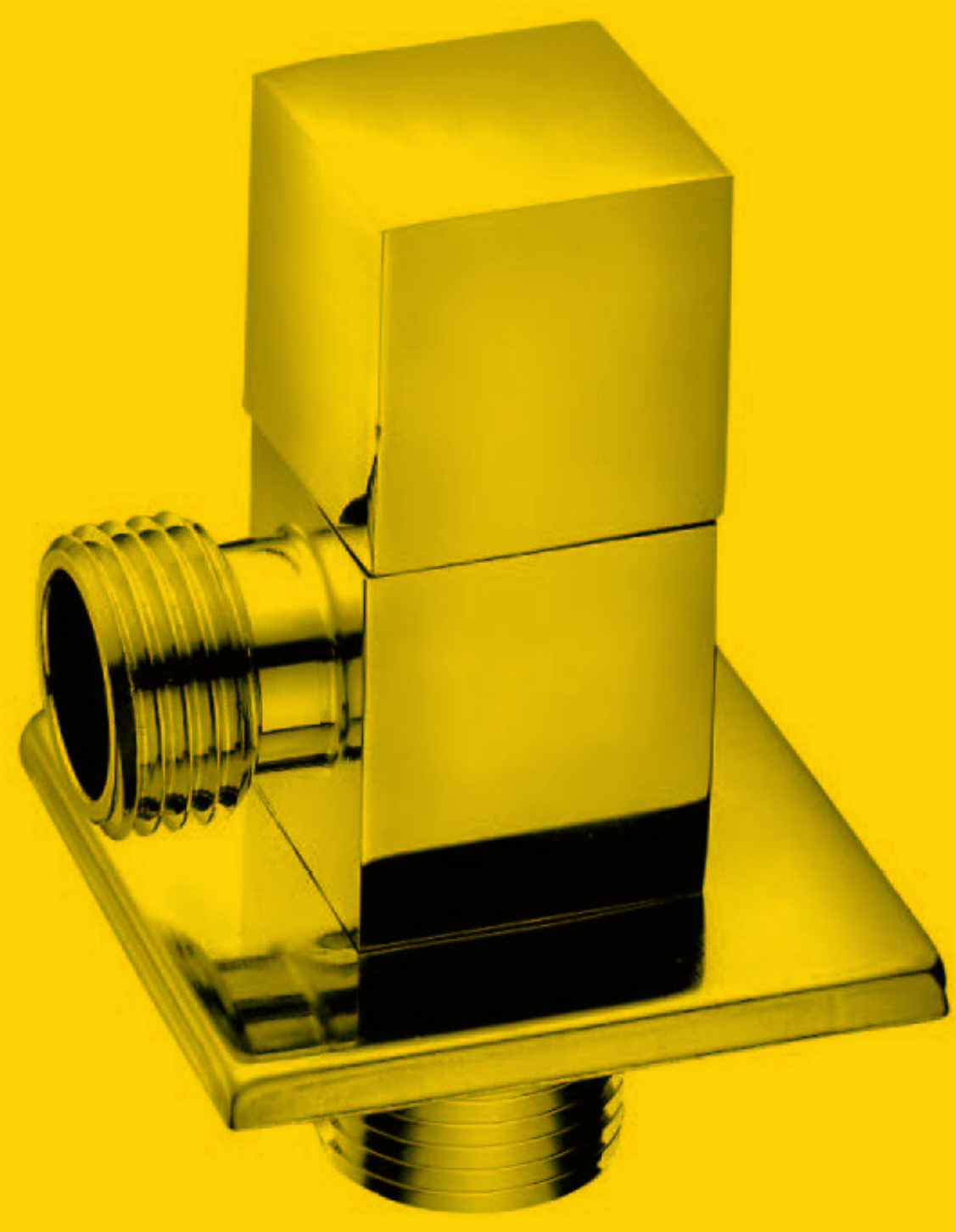

HC-1177Y

Triangle Handle Brass Angle Valve **PN16**

Feature & Benifits

- WRAS certified
- Europe Brass CW617N
- Hot or cold
- Include rosette
- Handle with indicator available

Test Pressure & Tempreture

Tempreture	Hydraulic
-10°C to 90°C	Shell: 24 bar
	Seat: 17.6 bar

Connection Standard

- ISO228-1 parallel thread
- Medium: Water

Materials

NO.	PART	Materials
1	Body	Brass CW617N
2	Gasket	EPDM
3	Baffle Plate	Brass CW617N
4	Stem	Brass CW617N
5	O-Ring	EPDM
6	Bonnet	Brass CW617N
7	O-Ring	EPDM
8	Circlip	304
9	Pressing Bead	ABS
10	Handle	ZINC
11	Decorative Cover	201
12	Cross Screw	SS304

Dimensional Drawing

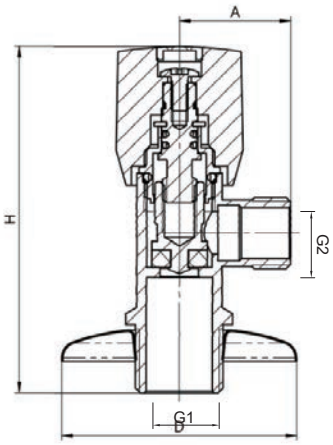

Dimensions

SIZE (inch)	H (mm)	D (mm)	A (mm)	G1	G2
1/2"x3/8"	81	55	26	1/2"	3/8"
1/2"x1/2"	81	55	26	1/2"	1/2"
1/2"x3/4"	81	55	26	1/2"	3/4"

Pressure & temperature ratings

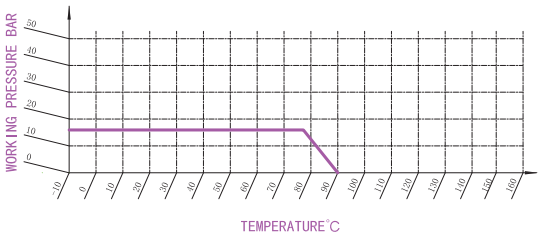

HC-1175Y

Triangle Handle Brass Angle Valve **PN16**

Feature & Benifits

- WRAS certified
- Europe Brass CW617N
- Hot or cold
- Include rosette
- Handle with indicator available

Test Pressure & Tempreture

Tempreture	Hydraulic
-10°C to 90°C	Shell: 24 bar
	Seat: 17.6 bar

Connection Standard

- ISO228-1 parallel thread
- Medium: Water

Materials

NO.	PART	Materials
1	Handle Wheel	ZINC
2	Plastic Fasteners	PA
3	Cap	Brass CW617N
4	O-ring	NBR
5	O-ring	NBR
6	Lead Screw	Brass CW617N
7	Water Stop Plate	Brass CW617N
8	Rubber Mat	EPDM
9	Valve Body	Brass CW617N
10	Decorative Cover	201
11	Circlip	304

Dimensional Drawing

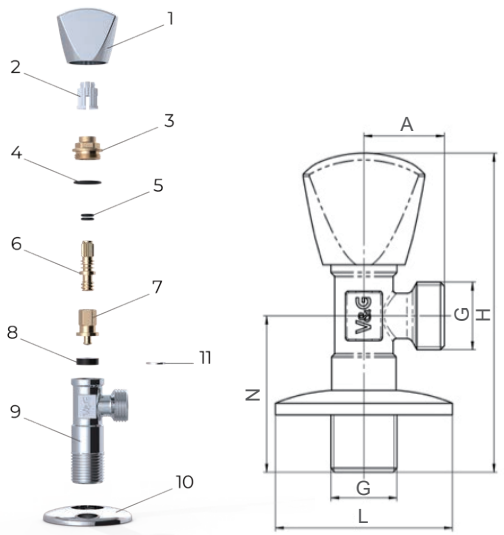

Dimensions

SIZE (inch)	A (mm)	H (mm)	N (mm)	L (mm)	G1	G2
1/2"x3/8"	25	96	45	55	1/2"	3/8"
1/2"x3/4"	25	96	45	55	1/2"	3/4"
1/2"	25	96	45	55	1/2"	1/2"

Pressure & temperature ratings

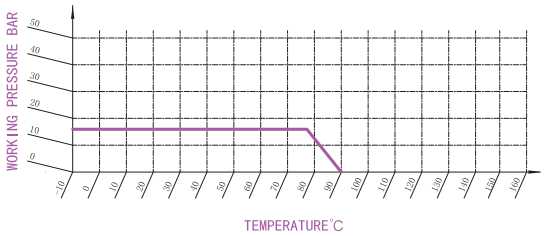

HC-90011

Square Handle Brass Angle Valve **PN16**

Feature & Benifits

- WRAS certified
- Europe Brass CW617N
- Quarter turn angle valve with a polished chrome finish
- Matt black finish available

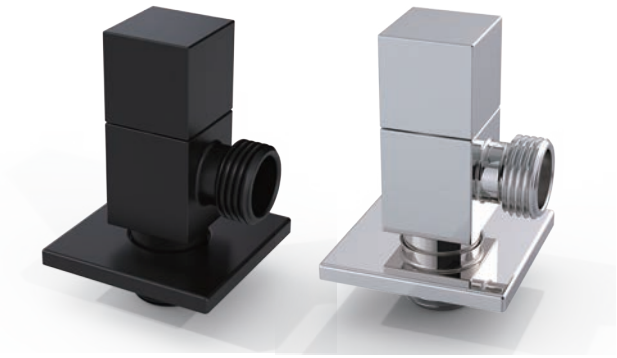

HC-90011B HC-90011C

Test Pressure & Tempreture

Tempreture	Hydraulic
-10°C to 90°C	Shell: 24 bar
	Seat: 17.6 bar

Connection Standard

- ISO228-1 parallel thread
- Medium: Water

Materials

NO.	PART	Materials
1	Handle Wheel	ZINC
2	Washer	PE
3	Cartridge	Brass CW617N Ceramic
4	Body	Brass CW617N
5	Decorative Cover	304

Dimensional Drawing

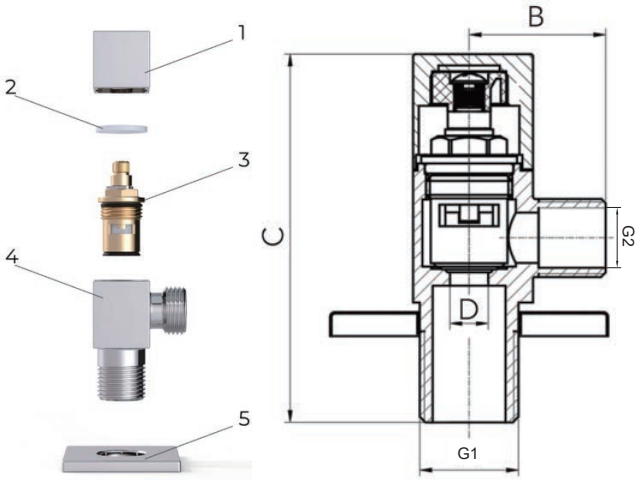

Dimensions

SIZE (inch)	B (mm)	C (mm)	D (mm)	G1	G2
1/2"x3/8"	29	76	10	1/2"	3/8"
1/2"x1/2"	29	76	10	1/2"	1/2"
1/2"x3/4"	29	76	10	1/2"	3/4"

Pressure & temperature ratings

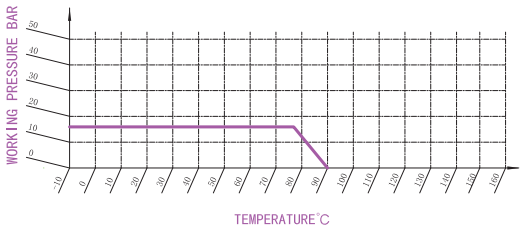

HC-90071

Round Handle Brass Angle Valve **PN16**

Feature & Benifits

- WRAS certified
- Europe Brass CW617N
- Quarter turn angle valve with a polished chrome finish
- Matt black finish available

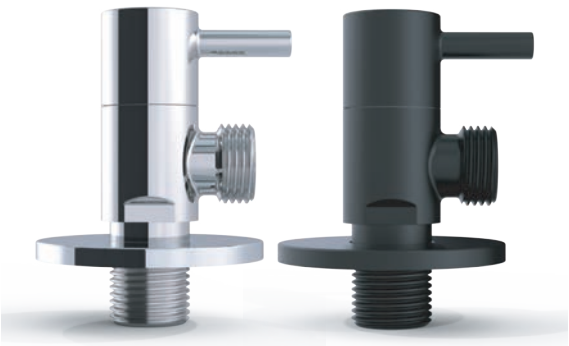

HC-90071C HC-90071B

Choose Finish:

Brush Gold Brush Black Brush Nickle Rose Gold Brush Bronze Chrome

Test Pressure & Temperature

Tempreture	Hydraulic
-10°C to 90°C	Shell: 24 bar
	Seat: 17.6 bar

Connection Standard

- ISO228-1 parallel thread
- Medium: Water

Materials

NO.	PART	Materials
1	Handle Wheel	ZINC
2	Washer	PTFE
3	Cartridge	Brass CW617N Ceramic
4	Body	Brass CW617N
5	Decorative Cover	Steel

Dimensional Drawing

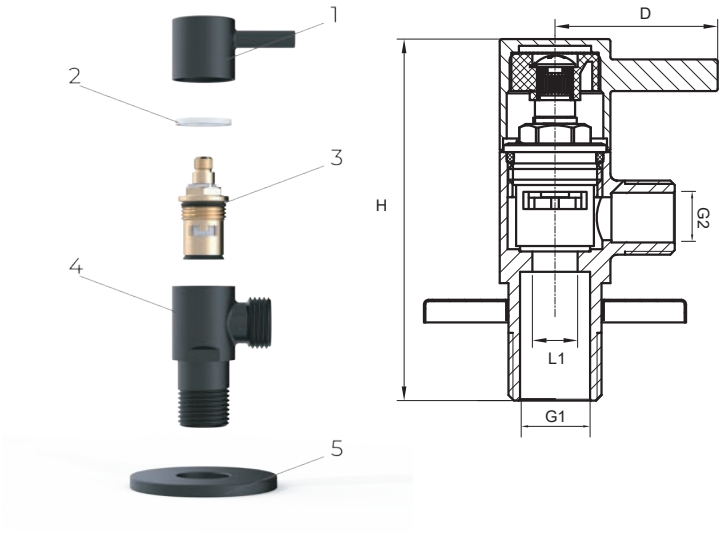

Dimensions

SIZE (inch)	L1 (mm)	H (mm)	D (mm)	G1	G2
1/2"x3/8"	36	80	10	1/2"	3/8"
1/2"x1/2"	36	80	10	1/2"	1/2"
1/2"x3/4"	36	80	10	1/2"	3/4"

Pressure & temperature ratings

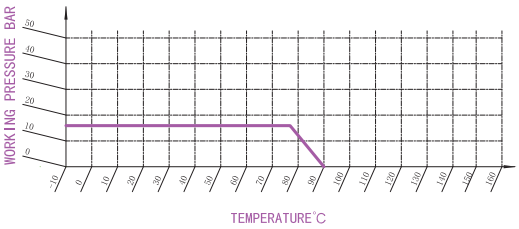

HC-93001

Round Handle Brass Angle Valve **PN10**

DVGW CERT GMBH

Feature & Benifits

- Europe Brass CW617N-4MS
- Quarter turn angle valve with a polished chrome finish

Choose Finish:

Brush Gold Brush Black Brush Nickle Rose Gold Brush Bronze Chrome

Test Pressure & Temperature

Tempreture	Hydraulic
-10°C to 90°C	Shell: 24 bar
	Seat: 17.6 bar

Connection Standard

- ISO228-1 parallel thread
- Medium: Water

Materials

NO.	PART	Materials
1	Body	Brass CW617N-4MS
2	Handle	ABS
3	Screw	304
4	Stem	Brass CW617N-4MS
5	O ring	EPDM
6	Gasket	EPDM
7	Flat gasket	PTFE
8	Rubber ring	EPDM
9	Gasket	Brass
10	Circlip	Brass
11	Bonnet	Brass CW617N-4MS
12	Decorative cover	304

Dimensional Drawing

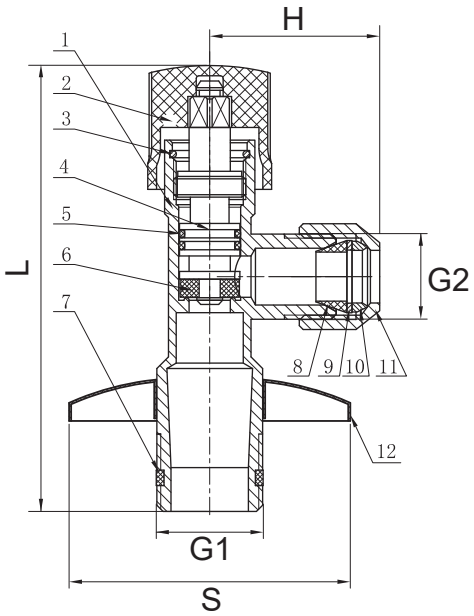

Dimensions

SIZE (inch)	L (mm)	S (mm)	H (mm)	G1	G2
1/2"x3/8"	86	55	32	1/2"	3/8"

Pressure & temperature ratings

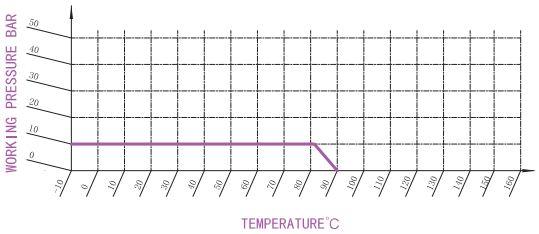

stop valve

HC-12412

Brass Stop Valve **PN16**

Feature & Benifits

- Europe Brass CW617N
- Hot or Cold
- Female iron x female iron
- Include rosette

Test Pressure & Temperature

Tempreture	Hydraulic
3°C to 80°C	Shell: 24 bar
	Seat: 17.6 bar

Connection Standard

- ISO228-1 parallel thread
- Medium: Water

Materials

NO.	PART	Materials
1	Body	Brass CW617N
2	Rubber Matt	EPDM
3	Screw with Stop Plate	Brass CW617N
4	Bonnet	Brass CW617N
5	O-Ring	EPDM
6	Filler	PTFE
7	Decorative Cover	H62
8	Rubber Pad	EPDM
9	Cap	Brass CW617N
10	Nozzes	ZN
11	Hand Wheels	ZN
12	Plastic Buckle-Red	PP
13	Plastic Buckle-Blue	PP

Dimensional Drawing

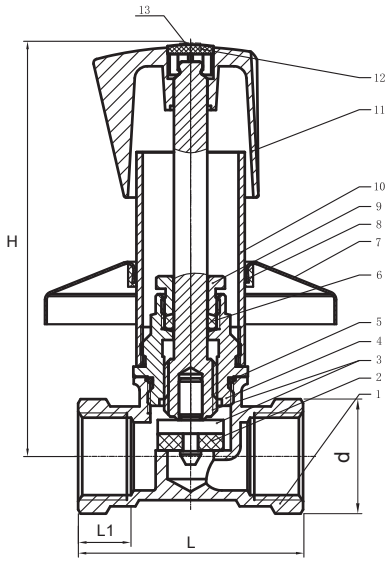

Installation Dimensions

SIZE (inch)	L (mm)	L1 (mm)	H (mm)	d (mm)
1/2"	54	12.7	100	25.4
3/4"	58.7	14	100	32.5

Pressure & temperature ratings

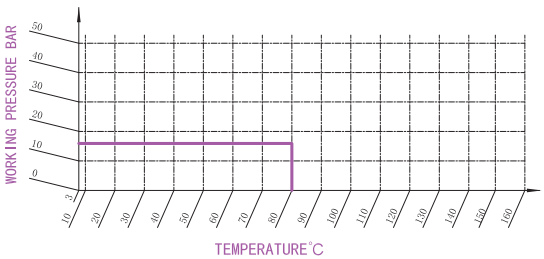

HC-20202

Bronze Full Port Gate Valve **PN16**

Feature & Benifits

- WRAS certified
- Robust and high quality bronze body
- Crutch top
- Compression x compression
- BS 1010

Test Pressure & Tempreture

Tempreture	Hydraulic
0°C to 90°C	Shell: 24 bar
	Seat: 17.6 bar

Connection Standard

- Compression version supplied with ends complying with BS EN 1254-2

Material

NO.	Part	Material
1	Body	LG2
2	Gasket	EPDM
3	Stem	/
4	Gasket	PTFE
5	Bonnet	CZ132
6	Gland	PTFE
7	Adjustable Nut	Brass
8	Handle	Brass
9	Nut	Q235
10	Ferrule	H65
11	Hexagon Nut	Brass

Dimensional Drawing

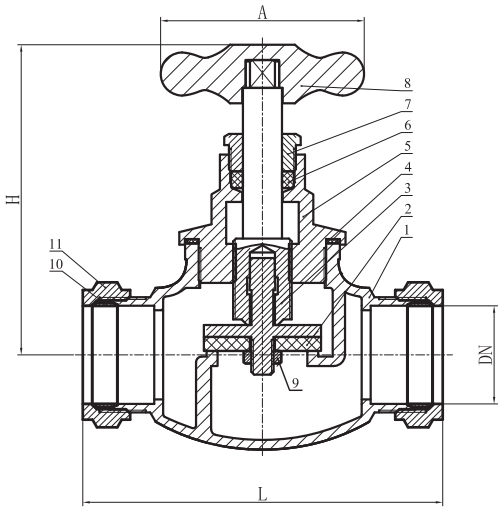

Dimensions

SIZE (inch)	H (mm)	A (mm)	DN (mm)	L (mm)
35mm	110	73	35	129
42mm	134	80	42	140
54mm	149	93	54	168

Pressure & temperature ratings

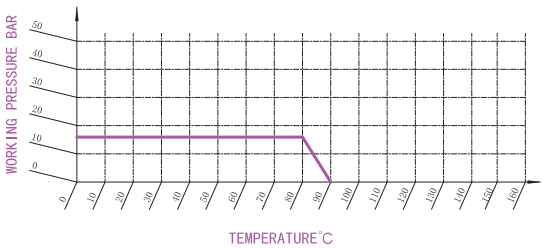

HC-20142

Brass DZR Stop Valve **PN16**

Feature & Benifits

- WRAS certified
- Europe Brass DZR
- Crutch top
- Compression x compression
- BS 1010

Test Pressure & Temperature

Tempreture	Hydraulic
0°C to 90°C	Shell: 24 bar
	Seat: 17.6 bar

Connection Standard

- Compression version supplied with ends complying with BS EN 1254-2 for use with BS EN 1057 R250 (half hard) copper tube

Materials

NO.	PART	Materials
1	Body	DZR Brass
2	Rubber Mat	EPDM
3	Screw	DZR Brass
4	Flat Washer	PTFE
5	Valve Cover	DZR Brass
6	Filler	PTFE
7	Press Cap	DZR Brass
8	Handle	DZR Brass
9	Head Screw	DZR Brass
10	Card Sleeve	T2
11	Hexagonal Hat	DZR Brass

Dimensional Drawing

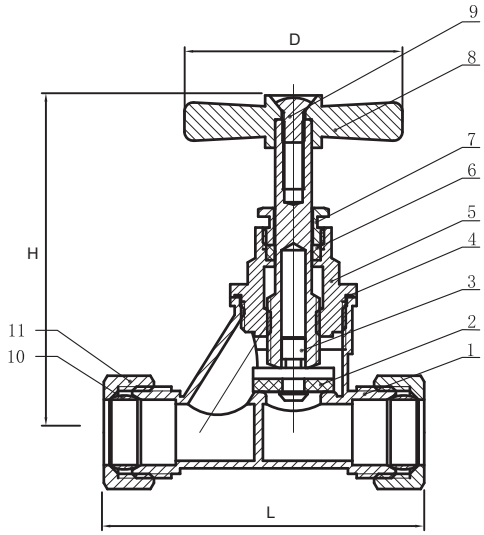

Installation Dimensions

SIZE (inch)	L (mm)	H (mm)	d (mm)	D (mm)
15mm	73.5	77.3	15	50
22mm	90.5	86.5	22	54
28mm	106	94.5	28	62

Pressure & temperature ratings

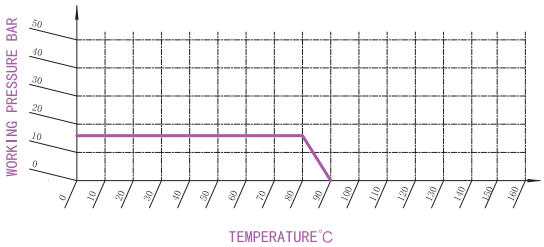

HC-24112

Brass DZR Stop Valve **PN16**

Feature & Benifits

- WRAS certified
- Europe Brass DZR
- Crutch top
- Compression x compression
- BS 1010

Test Pressure & Temperature

Tempreture	Hydraulic
0°C to 90°C	Shell: 24 bar
	Seat: 17.6 bar

Connection Standard

- Compression version supplied with ends complying with BS EN 1254-2 for use with BS EN 1057 R250 (half hard) copper tube

Materials

NO.	PART	Materials
1	Body	DZR Brass
2	Rubber Mat	NBR
3	Screw	DZR Brass
4	Flat Washer	PTFE
5	Bonnet	DZR Brass
6	Filler	Graphite
7	Press Cap	DZR Brass
8	Handle	DZR Brass
9	Head Screw	DZR Brass
10	Card Holder	T2
11	Hexagonal	DZR Brass

Dimensional Drawing

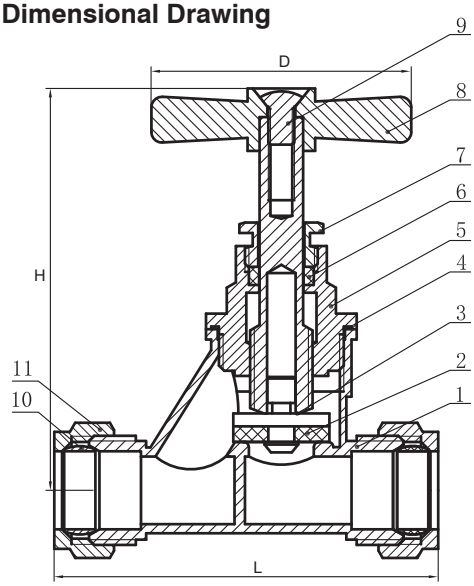

Installation Dimensions

SIZE (inch)	L (mm)	H (mm)	D (mm)
15mm	73.5	77.3	50
22mm	92.1	86.5	54
28mm	105.3	94.5	62

Pressure & temperature ratings

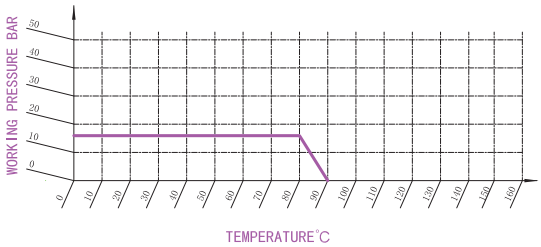

HC-20142

Brass DZR Stop Valve **PN16**

Feature & Benifits

- WRAS certified
- Europe Brass DZR
- Crutch top
- Compression x compression
- BS 1010

Test Pressure & Temperature

Tempreture	Hydraulic
0°C to 90°C	Shell: 24 bar
	Seat: 17.6 bar

Connection Standard

- Compression version supplied with ends complying with BS EN 1254-2 for use with BS EN 1057 R250 (half hard) copper tube

Materials

NO.	PART	Materials
1	Body	DZR Brass
2	Rubber Mat	EPDM
3	Screw	DZR Brass
4	Flat Washer	PTFE
5	Valve Cover	DZR Brass
6	Filler	PTFE
7	Press Cap	DZR Brass
8	Handle	DZR Brass
9	Head Screw	DZR Brass
10	Card Sleeve	T2
11	Hexagonal Hat	DZR Brass

Dimensional Drawing

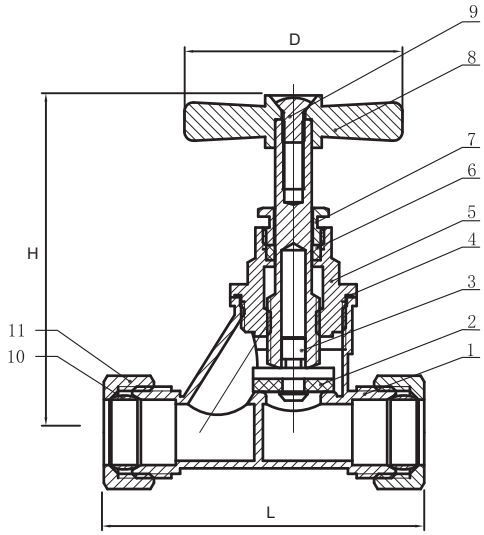

Installation Dimensions

SIZE (inch)	L (mm)	H (mm)	d (mm)	D (mm)
15mm	73.5	77.3	15	50
22mm	90.5	86.5	22	54
28mm	106	94.5	28	62

Pressure & temperature ratings

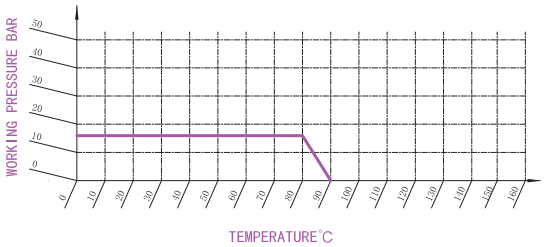

HC-62002

Brass Manifolds with shutoff valves **PN16**

Feature & Benifits

- WRAS certified
- Europe Brass CW617N
- Copper X swivel union
- Screw driver operated

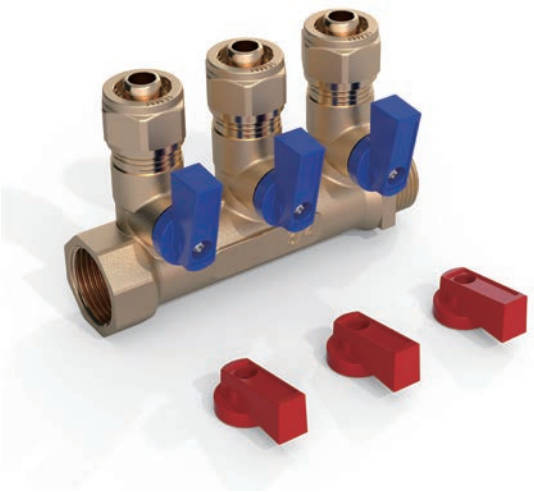

Test Pressure & Temperature

Tempreture	Hydraulic
-20°C to 120°C	Shell: 24 bar
	Seat: 17.6 bar

Connection Standard

- ISO228-1 parallel thread
- Medium: Water

Materials

NO.	PART	Materials
1	Body	Brass CW617N
2	Bonnet	Brass CW617N
3	Sealing Seat	PTFE
4	Valve Ball	Brass CW617N
5	Valve Stem	Brass CW617N
6	O-Ring	EPDM
7	Handle	AL
8	Head Screw	Q235
9	O-Ring	EPDM
10	Water Outlet	Brass CW617N
11	Shim	ABS
12	Card Holder	H65
13	Hexagon Hat	Brass CW617N

Dimensional Drawing

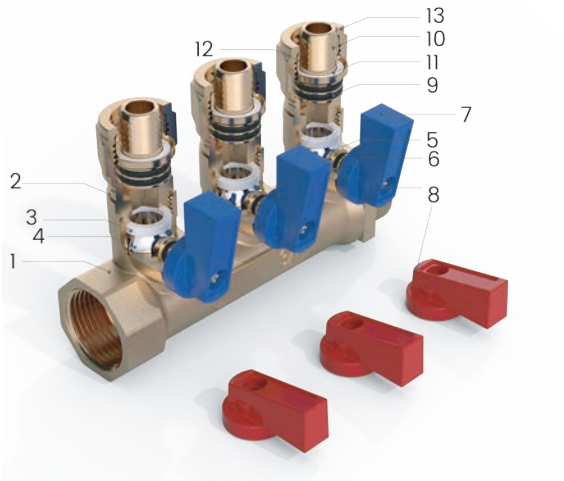

Installation Dimensions

SIZE (inch)	L (mm)	L1 (mm)	L2 (mm)	H (mm)	D (mm)
1/2"x3/4"-2 Way(16mmx2. 2)	83	14	12.5	65.2	36
1/2"x3/4"-3 Way(16mmx2. 2)	119	14	12.5	65.2	36
1/2"x3/4"-4 Way(16mmx2. 2)	155	14	12.5	65.2	36

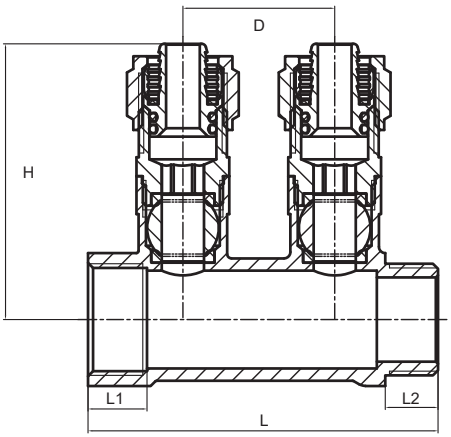

HC-61002

Brass Manifolds **PN16**

Feature & Benifits

- Europe Brass CW617N
- Copper X swivel union
- Screw driver operated

Test Pressure & Temperature

Tempreture	Hydraulic
-20°C to 120°C	Shell: 24 bar
	Seat: 17.6 bar

Connection Standard

- ISO228-1 parallel thread
- Medium: Water

Materials

NO.	PART	Materials
1	Body	Brass CW617N
2	O-Ring	EPDM
3	Water Outlet	Brass CW617N
4	Gasket	ABS
5	Card Holder	H65
6	Hexagonal Hat	Brass CW617N

Dimensional Drawing

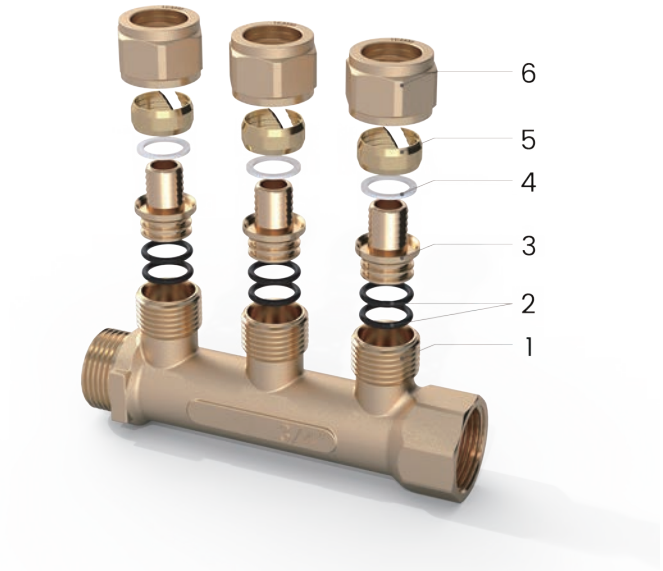

Installation Dimensions

SIZE (inch)	L (mm)	L1 (mm)	L2 (mm)	H (mm)	D (mm)
16mmx1/2"x2.2mm(2 ways)	90	12.5	15	48.3	36
16mmx1/2"x2.2mm(3 ways)	126	12.5	15	48.3	36
16mmx1/2"x2.2mm(4 ways)	162	12.5	15	48.3	36

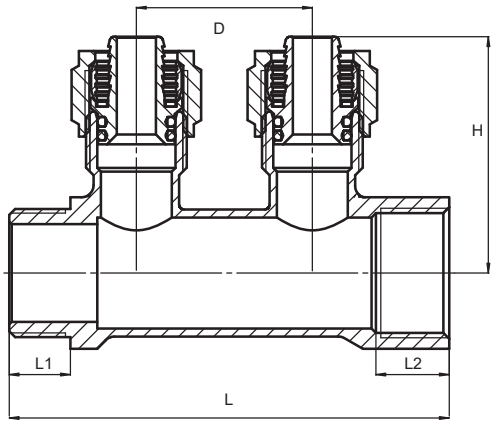

thermostatic mixing valve

HC37.10012

Thermostatic Mixing Valve

APPLICATION

- Thermostatic mixing valves of this type are used for central regulation of the water temperature in solar-powered, bivalent water heaters.

Feature & Benifits

- Thermostat controls both hot and cold water
- Prevents scalding by accurately controlling the water temperature
- Approved at high and low pressure designations for single outlet

Technical Data

Media	VG37.10012			
Medium:	Water			
Connections/Sizes				
Connection size	1/2"	3/4"	1"	11/4"
Pressure values				
Max. operating pressure:	max. 10 bar			
Maximum pressure	2.5 bar			
Operatingtemperatures				
Max. hot water inlet	110°C			
Setting range	35-55°C			
Preset temperature during	38°C			
Control accuracy:	<±4K			
Specifications				
Specifications	76L/min			
Installation position	Arbitrary			
Material	DZR CW602N			

Connection Standard

- UK END CONNECTION:Taper threaded to BS
- EN10226-2(ISO7-1)formerly BS 21
- ISO228-1 parallel thread
- US END CONNECTION: ANSI B1.20.1
- Available in pex, quick-connect, cpvc end, w/press

Materials

NO.	PART	Materials	NO.	PART	Materials
1	Valve Body	CW602N	9	Cross Recessed Pan Head Screw	Q235
2	Valve Cap	CW602N	10	Handwheel Base	ABS
3	Spring	304	11	Rubber Gasket	EPDM
4	Bushing	PSU	12	Connector	CW602N
5	Temperature Regler	PSU/T2	13	Octagonal Nut	CW602N
6	O-ring	EPDM	14	Filter Screen	304
7	Stem part	CW602/304/EPDM	15	Check Valve Core	/
8	Handwheel Base	ABS	16	Circlip	304

Dimensional Drawing

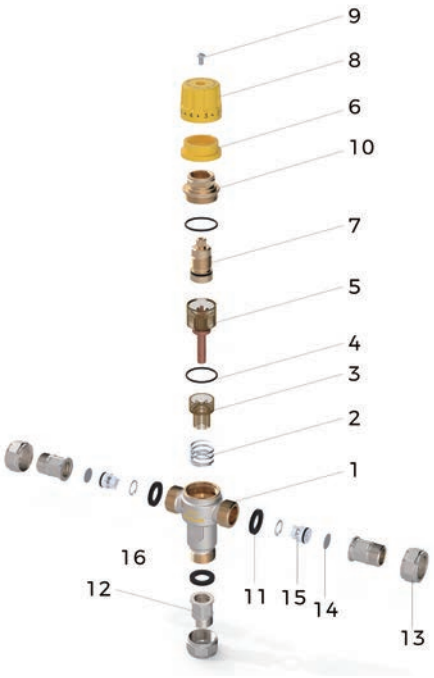

Temperature rang

ITEM	MIN	1	2	3	4	5	6	7	MAX
VG37.10012	35	38	40	43	45	47	50	52	55

Installation Dimensions

SIZE (inch)	L (mm)	H (mm)	d
1/2"	148	160	1/2"
3/4"	148	160	3/4"
1"	158	165	1"
11/4"	185	178	11/4"

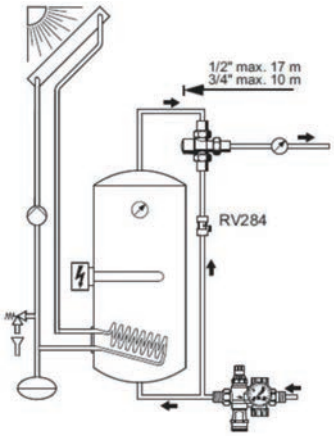

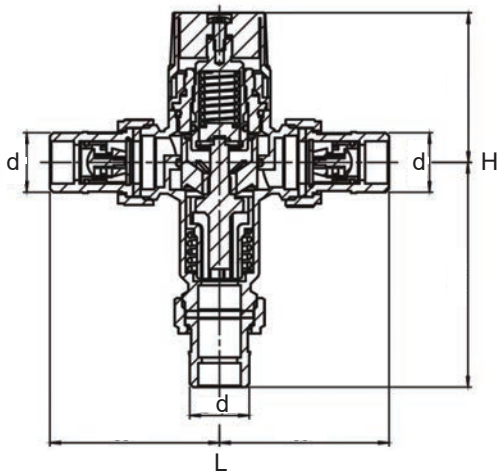

HC37.10014

Thermostatic Mixing Valve

APPLICATION

- Thermostatic mixing valves of this type are used for central regulation of the water temperature in solar-powered, bivalent water heaters.

Feature & Benifits

- Thermostat controls both hot and cold water
- Prevents scalding by accurately controlling the water temperature
- Approved at high and low pressure designations for single outlet

Technical Data

Media	VG37.10014		
Medium:	Water		
Connections/Sizes			
Connection size	1/2"	3/4"	1"
Pressure values			
Max. operating pressure:	max. 10 bar		
Maximum pressure	2.5 bar		
Operatingtemperatures			
Max. hot water inlet	110°C		
Setting range	35-55°C		
Preset temperature during	38°C		
Control accuracy:	<±4K		
Specifications			
Specifications	37L/min		
Installation position	Arbitrary		
Material	DZR CW602N		

Connection Standard

- UK END CONNECTION:Taper threaded to BS
- EN10226-2(ISO7-1)formerly BS 21
- ISO228-1 parallel thread
- US END CONNECTION: ANSI B1.20.1
- Available in pex, quick-connect, cpvc end, w/press

Materials

NO.	PART	Materials	NO.	PART	Materials
1	Valve Body	CW602N	9	Handwheel	ABS
2	Return spring	304	10	Cross Recessed Pan Screw	Q235
3	Flow guide tube	PSU	11	Rubber Gasket	EPDM
4	O-ring	EPDM	12	Connector	CW602N
5	Temperature Regler	PSU/T2	13	Filter Screen	304
6	Bonnet	CW602N	14	Check Valve Core	/
7	Stem part	CW602/304/EPDM	15	Retaining Ring	304
8	Handwheel Base	ABS	16	Octagonal Nut	CW602N

Dimensional Drawing

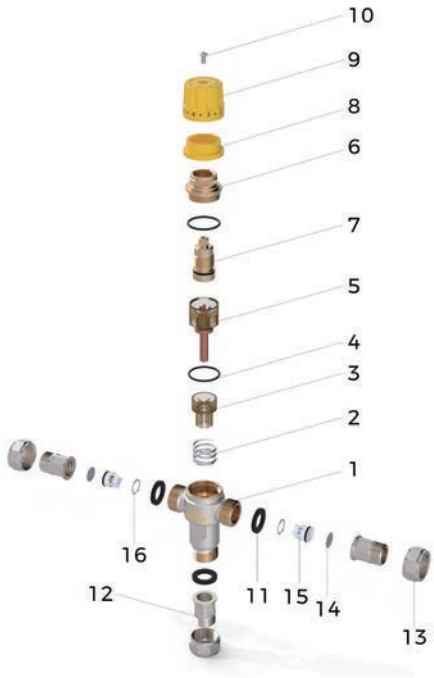

Temperature rang

ITEM	MIN	1	2	3	4	5	6	7	MAX
VG37.10014	35	38	40	43	45	47	50	52	55

Installation Dimensions

SIZE (inch)	L (mm)	H (mm)	d
1/2"	132	144	1/2"
3/4"	150	152	3/4"
3/4"	68	111	3/4"
1"	68	111	1"

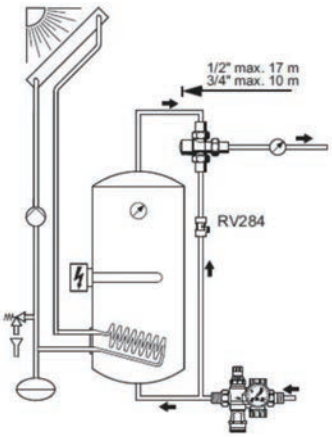

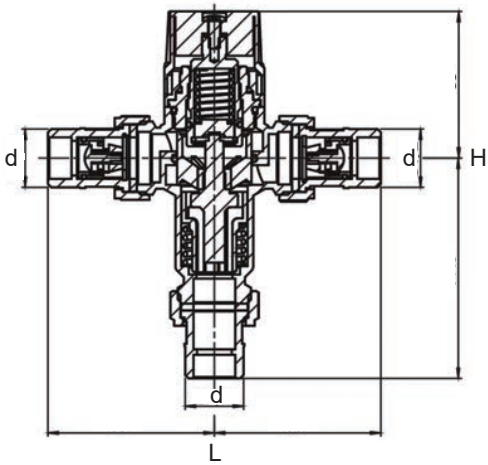

other valves

HC-10202

Brass Draincock **PN16**

Feature & Benifits

- Europe Brass CW617N
- Eenable systems to be drained without removing pipework.
- It prevent the build up of sediment that flows through the pipework thus
- extending its life expectancy to BS 2879

Test Pressure & Temperature

Tempreture	Hydraulic
-20°C to 120°C	Shell: 24 bar
	Seat: 17.6 bar

Connection Standard

- ISO228-1 parallel thread
- Medium: Water

Materials

NO.	PART	Materials
1	Body	Brass CW602N
2	Gasket	EPDM
3	Stem	Brass
4	O-Ring	EPDM
5	O-Ring	EPDM
6	Nut	Brass

Dimensional Drawing

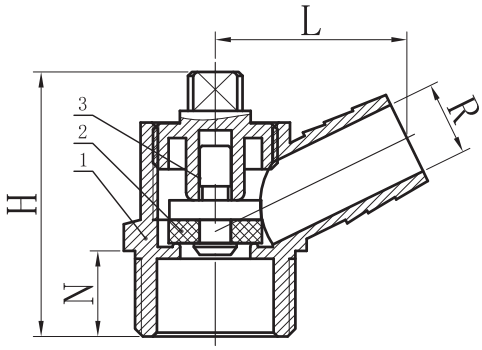

Installation Dimensions

SIZE (inch)	H (mm)	N (mm)	L (mm)	R (mm)
1/2"	47	12	27	10
3/4"	63	16	41	14

HC-10132

Brass DZR Draincock **PN16**

Feature & Benifits

- WRAS certified
- Europe Brass DZR
- Eenable systems to be drained without removing pipework.
- It prevent the build up of sediment that flows through the pipework thus
- extending its life expectancy to BS 2879

Test Pressure & Temperature

Tempreture	Hydraulic
-20°C to 120°C	Shell: 24 bar
	Seat: 17.6 bar

Connection Standard

- ISO228-1 parallel thread
- Medium: Water

Materials

NO.	PART	Materials
1	Body	Brass CW602N
2	Gasket	EPDM
3	Stem	Brass
4	O-Ring	EPDM
5	O-Ring	EPDM
6	Nut	Brass

Dimensional Drawing

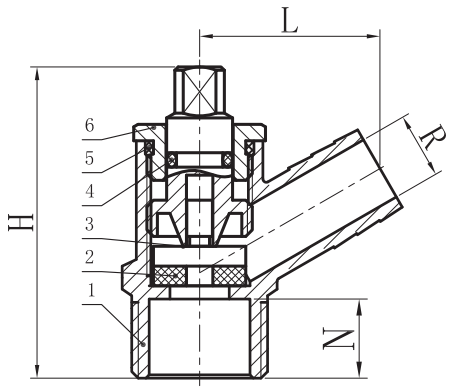

Installation Dimensions

SIZE (inch)	H (mm)	N (mm)	L (mm)	R (mm)
1/2”	47	12	27	10
3/4”	64	16	41	14
1”	64	15	41	14

HC-60202

Brass Service Valve **PN16**

Feature & Benifits

- WRAS certified
- Europe Brass CW617N
- Copper X swivel union
- Screw driver operated

Test Pressure & Temperature

Tempreture	Hydraulic
-20°C to 120°C	Shell: 15 bar
	Seat: 11 bar

Connection Standard

- ISO228-1 parallel thread
- Medium: Water

Materials

NO .	PART	Materials
1	Body	Brass
2	Circlip	304
3	O-Ring	EPDM
4	Ball	Brass
5	Stem	Brass
6	O-Ring	EPDM
7	Tube	Brass
8	Nut	Brass
9	Gasket	/
10	Ferrule	T2
11	Nut	Brass
12	Gasket	EPDM

Dimensional Drawing

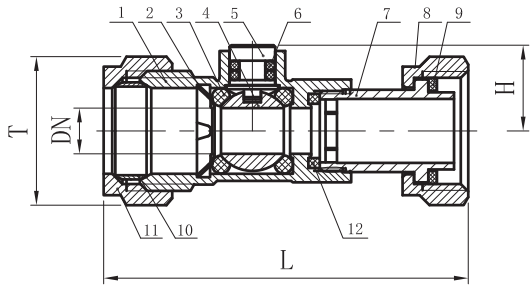

Installation Dimensions

SIZE (inch)	L (mm)	DN (mm)	H (mm)	T
15mm	64	8	15	SW23
22mm	81	12	18	SW30

HC-60102

Brass Service Valve **PN16**

Feature & Benifits

- Europe Brass CW617N
- Copper X copper

Test Pressure & Temperature

Tempreture	Hydraulic
-20°C to 120°C	Shell: 24 bar
	Seat: 17.6 bar

Connection Standard

- ISO228-1 parallel thread
- Medium: Water

Materials

NO.	PART	Materials
1	Body	Brass
2	Circlip	304
3	O-Ring	EPDM
4	Ball	Brass
5	Stem	Brass
6	O-Ring	EPDM
7	Ferrule	T2
8	Nut	Brass

Dimensional Drawing

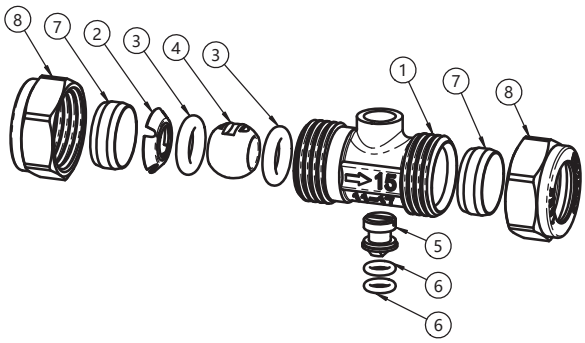

Installation Dimensions

SIZE (inch)	L (mm)	H (mm)	D (mm)
15mm	64	23	15
22mm	81.4	29.8	18

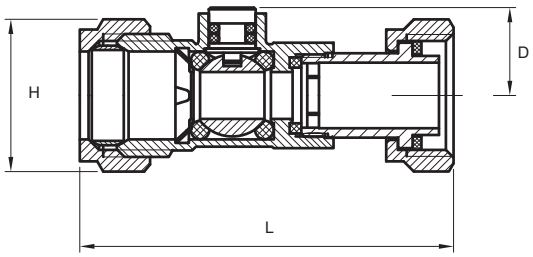

HC-1325Y

Water Hammer Arrestors **400 PSI**

Feature & Benifits

- Fine Quality T2 Copper Tube Type L, and Lead Free Brass
- Forged Brass Fittings
- NSF Approved POM Piston
- Polished and Varnished Surface, Color Permanently Shiny and Never Rusty
- NSF Approved O Rings with FDA Approved Silicon Lubricant
- Lead free Solder

Applacation

- Water hammer arrestors are installed in water distribtion piping system to prevent detrimental surge pressures, thereby prolonging the service life of valves, piping, trim, equipment, appliances, appurtenances, and other devices which are parts of the distribution system and eliminate noise.

- Size:Type A,B,C,D,E,F is used for commercial field. System pressure up to 60 PSI needs to install a pressure reduce valve.

A B C D E F

Connection Standard

- UK END CONNECTION:Taper threaded to BS EN10226-2(ISO7-1)formerly BS 21
- US END CONNECTION: ANSI B1.20.1
- NPT/BSPT/BSP Male Thread
- Working Medium: Water

Test Pressure & Temperature

Tempreture	Preesure
33°C to 180F	Operation Pressure: 0-60 PSI
	Max Pressure: 400 PSI

Dimensional Drawing

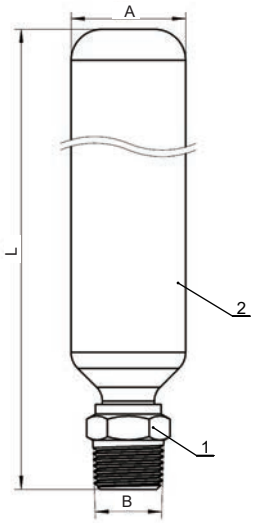

Materials

NO.	PART	Materials
1	HA Body	Brass
2	Water Hammer Arrestor	Copper

Dimensions

SIZE (inch)	A (mm)	B	L (mm)	Fixture Unit Capacity
A	29	1/2"	154	1 to 11
B	35	3/4"	206	12 to 32
C	41	1"	221	33 to 60
D	54	11/4"	256	61 to 113
E	67	11/2"	284	114 to 154
F	67	2"	365	155 to 330

For Flow Pressures Up To 60 P.S.I.G.

Length of Pipe	Nominal Pipe Diameter					
	1/2"	3/4"	1"	11/4"	11/2"	2"
25'	A	A	B	C	D	E
50'	A	B	C	D	E	F
75'	B	C	D	AE	F	EF
100'	C	D	E	F	CF	FF
125'	C	D	F	AF	EF	EFF
150	D	E	F	DF	FF	FFF