HC-A20332

Brass Compression Ball Valve **PN16**



Feature & Benefits

- WRAS Certified
- Europe Brass CW617N
- Full port
- Designed to be light, compact and easy to install and operate
- Butterfly handle with anti-corrosion treatment and Blue PVC coating
- Valves are Tested in Accordance with BSEN 1254-2

Test Pressure & Temperature

Temperature	Hydraulic
-20°C to 120°C	Shell: 25 bar
	Seat: 17.6 bar

Connection Standard

- Compression version supplied with ends complying
- with BS EN 1254-2

Materials

NO.	PART	Materials
1	Body	Brass CW617N
2	Bonnet	Brass CW617N
3	Seat	PTFE
4	Ball	Brass
5	Stem	Brass
6	Gland	PTFE
7	Packing Nut	Brass
8	Handle	Aluminum
9	Nut	Brass
10	Ring	Brass
11	Hexagonal Nut	Brass

Dimensional Drawing

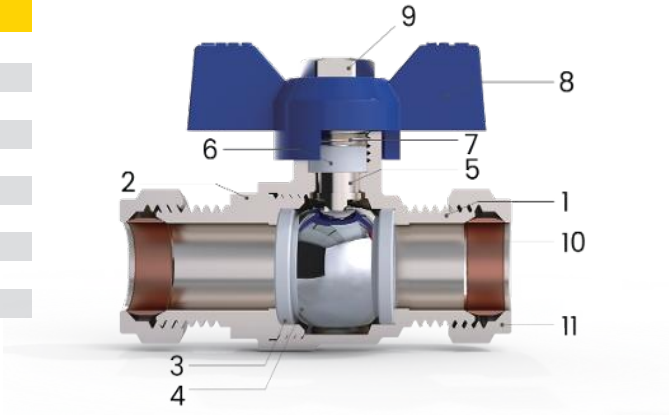

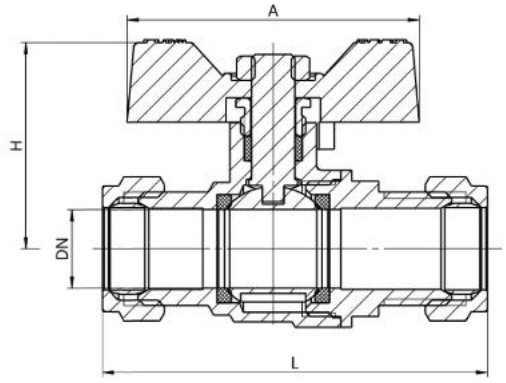

Dimensions

SIZE (inch)	H (mm)	DN (mm)	A (mm)	L (mm)
15mm	38	15	54	71
22mm	48	20	63	80
28mm	51	25	63	96

Pressure & temperature ratings

