TECHNICAL DATASHEET
WRAS APPROVED GATE VALVE

HOME CREATOR

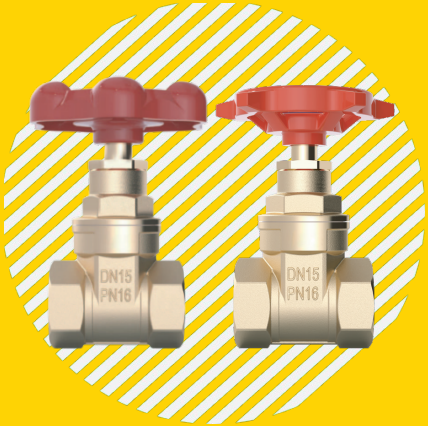

Item No.: HC-10772,HC-10772IDR

1 CERTIFICATION INFORMATION

Declaration of conformity: Dzr full port gate valve. Confirmation of the approval can be obtained from the WRAS Approvals Directory (www.wras.co.uk/directory)

2 PRODUCT BASICS

Product Name: **WRAS APPROVED GATE VALVE（FXF series)**

Purpose: Gate valves are mainly used in urban water supply and drainage systems, firefighting systems, water treatment systems, domestic water systems, air conditioning, heating systems, etc.

Manufacturer (supplier): HOME CREATOR GROUP LTD.

3 MAIN TECHNICAL DATA AND CHARACTERISTICS

3.1 SPECIFICATIONS

Table 1

Connection thread, inch		1/2"	3/4"	1"	11/4"	11/2"	2"
Nominal diameter DN, mm		15	20	25	32	40	50
Nominal pressure PN, bar		16	16	16	16	16	16
Operating temperature range, ºC		−20 to +120					
Ambient temperature, ºC		−20 to +60					
Maximum force on the handle, N·m		10					
Seal tightness		Class "A"					
Connection thread (ISO 228)		Parallel					
Uptime	average full-service life	30 years old					
	average full resource	55,000 cycles					
	MTBF	25,000 cycles					

3.2 MATERIAL OF MANUFACTURE AND CONSTRUCTION OF GATE VALVE

Female-Female thread (FxF)

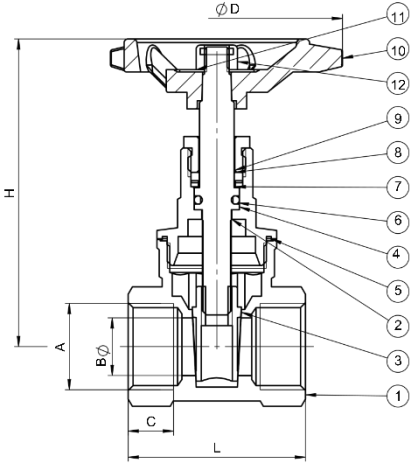

Table 2

Name	Material
Body (1)	CW617N
Bonnet (2)	CW617N
Gate (3)	Brass
Stem (4)	Brass
Washer (5)	PTFE
O-Ring (6)	EPDM
Gasket (7)	Brass
Washer (8)	PTFE
Cap (9)	Brass
Handwheel (10)	Cast Iron/AL
Nameplate (11)	AL
Nut (12)	Steel

1. HOME CREATOR brass products are made by hot stamping of brass grade CW617N as per the European standard EN12165.
2. The Rubber Mat are made of EP8018F EPDM according to European standards.
3. We can also provide this item in DZR brass upon customer request.

3.3 GATE VALVE

Female-Female thread (FxF)

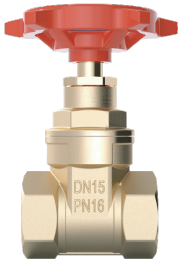

3.4 CROSS SECTION

Female-Female thread (FxF)

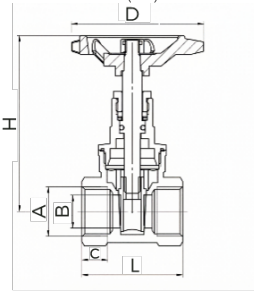

Table 3

Item	Size	ϕ B	C	L	H	ϕ D
HC-10772	1/2"	14	11	43	74.7	61
HC-10772	3/4"	18	11	46	82.9	61
HC-10772	1"	23	14	52.5	93.5	64.5
HC-10772	1 1/4"	27	14	56	109.1	81.5
HC-10772	1 1/2"	33	14.5	60	125.5	81.5
HC-10772	2"	43	17.5	70	148.2	103.5

4 INSTALLATION AND OPERATION

4.1 Installation of a gate valve should be carried out by a specialist or a specialized organization in accordance with the Installation Requirement Notes (IRNs) "WRAS water regulation approval schedule."

4.2 The pipe thread is connected to the gate valve. When installing and tightening, the gate should be in a fully closed state. The pipe should be clean and free of sediment and rust, and the sealing material, such as raw material tape, should be clean and clean.

4.3 During installation, when tightening the valve, the key must be captured by the hexagon of the housing closest to the connection thread. It is not allowed to exceed the tightening moments indicated in the table below:

Size, inch	1/2"	3/4"	1"	11/4"	11/2"	2"
Maximum torque, N·m	75	100	125	160	200	250

4.4 When installing and tightening, the pipe should be perpendicular to the end face of the valve body. Use a wrench on the hexagonal or octagonal part on the same side of the thread instead of the hexagonal or octagonal part on the other end, as shown in Figure 1.

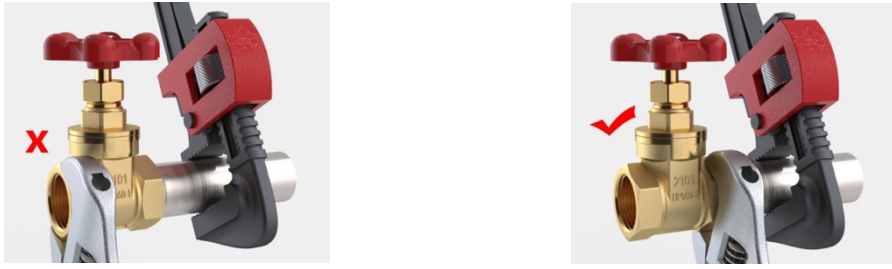

Figure 1

4.5 When both ends of the gate valve are internally threaded, the length of the external thread at the pipe end must be controlled to prevent the pipe end thread from pushing against the internal thread end face of the gate valve when the pipe end thread is screwed in, causing deformation of the valve body sealing surface and affecting the sealing performance, as shown in Figure 2.

4.6 When installing the gate valve, the pipes at both ends must be in the same straight line as the valve to avoid bending up and down, front and back, and misalignment, as shown in Figure 3.

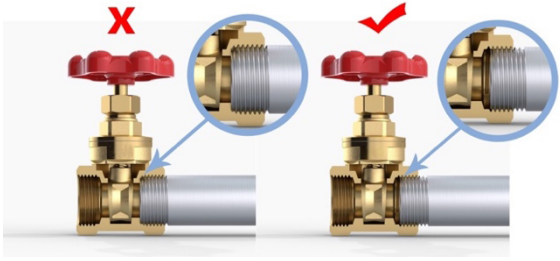

Figure 2



Figure 3

4.7 When opening and closing the gate valve, the clockwise direction is closed and the counterclockwise direction is open. Do not add any force arm tools during use to avoid structural damage to the gate valve.

4.8 When in use, the gate valve should be fully open or fully closed and should not be partially opened to reduce the sealing impact of the water flow on the gate plate and extend the service life.

5 DESCRIPTION AND WORK

It is mainly used to connect or cut off the medium in the pipeline, which is used to control the flow pressure of the fluid and is not suitable for regulating the flow of the medium.

6 MAINTENANCE

6.1 Articles must be operated within the values specified in para. 3, para. 4 of this technical passport.

6.2 To extend the service life of sealing elements, it is recommended to open / close the HOME CREATOR gate valve at least 1 time in 6 months.

7 STORAGE AND TRANSPORTATION CONDITIONS

Products are transported in the packaging of the manufacturer in accordance with the rules operating on the mode of transport used.

8 RESOURCES, LIFETIMES AND MANUFACTURER'S (SUPPLIER'S) WARRANTIES

8.1 Average full service life of a gate valve: 30 years.
8.2 The manufacturer (supplier) guarantees the operability and compliance with the safety requirements of the product if the consumer complies with this technical passport HC-10772,HC-10772IDR.
8.3 Warranty period: 5 years from the date of sale to the end user / from the date of commissioning of the object. The warranty covers all defects caused by the manufacturer.
8.4 When making claims about the quality of the goods, the buyer provides the following documents:
8.4.1 An application in any form, which indicates:
a) Name of the organization or F. And. About. buyer, actual address, contact phone number;
b) The name and address of the organization that carried out the installation of the product; c) a brief description of the malfunction of the product.
8.4.2 A document confirming the purchase of the product (cash/sales receipt, waybill, receipt, etc.).
8.4.3 Photos of the product confirming its malfunction, or the product itself.
8.4.4 Act of hydraulic testing of the system in which the product was mounted.
8.4.5 Completed warranty card.
8.5 The warranty does not cover defects arising from:
8.5.1 Violations of the passport regimes of storage, transportation, installation and operation of the product.
8.5.2 The presence of traces of extraneous interference in the design of the product.
8.5.3 Effects of substances aggressive to the materials of the product.
8.5.4 Effects on the product of excessive force.
8.5.5 Impact on the product of fire, natural disasters and other force majeure circumstances.
8.6 The warranty also does not apply in cases where the manufacturer's markings are partially or completely changed, erased, removed or illegibly visible.
8.7 In case of unreasonableness of the claim, the costs of diagnostics and examination of the product are paid by the buyer.
8.8 Manufacturer HOME CREATOR GROUP LTD. reserves the right to make changes to the design of the product that do not affect the declared technical characteristics.
8.9 Claims for the quality of the goods can be made during the warranty period at the address of the manufacturer HOME CREATOR GROUP LTD.

9 CERTIFICATE OF ACCEPTANCE AND PACKAGING

9.1 Gate valves packed by the manufacturer.
9.2 Packaging ensures the safety of products subject to compliance with clause 7.
9.3 The materials and substances used for packaging are safe for people and the environment.
9.4 The gate valve is in the open position.
9.5 The batch of gate valves is recognized as suitable for operation and is accepted with 100% control at RPR = 2.5 * PW.

Date of manufacture		QUALITY Mark	

10 **NOTE**

WARRANTY CARD No _____

Name: WRAS APPROVED GATE VALVE

Article: HC-10772,HC-10772IDR Quantity: _____

Name and Address of the trading organization: _____

Date of Sale: _____ Seller's full name / Seller's signature, Stamp / seal of the trading organization: _____

I agree with the terms of the warrant: _____

Product Return Mark: _____

Buyer's signature: _____

Date / Signature: _____

View your passport Online:

WARRANTY PERIOD: 5 YEARS

Warranty is provided.
according to paragraph 8 of the technical passport HC-10772,HC-10772IDR

HOME CREATOR GROUP LTD | LONDON, UK
Add: 167-169 Great Portland Street, London,
W1W 5PF, United Kingdom
Web: www.homecreatorgroup.com
Tel: +971 558432055