HC-10772DR & HC-10772IDR

DZR Brass Full Port Gate Valve ***PN16***

Feature & Benefits

- Europe DZR Brass 12165 CW602N Dezincification Resistant Brass
- Non-rising stem design to minimise installation height
- Full bore design to ensure minimal pressure drop
- Adjustable gland packing for ease of maintenance
- Valves are Tested in Accordance with BS EN 12288 PN16 Series B

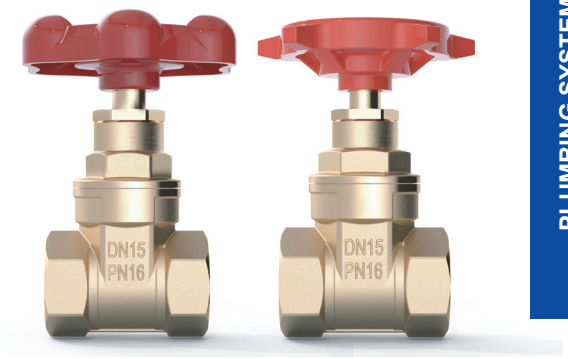

HC-10772IDR HC-10772DR

Test Pressure & Temperature

Temperature	Hydraulic
-20°C to 120°C	Shell: 24bar
	Seat: 17.6bar

Connection Standard

- UK END CONNECTION:Taper threaded to BS EN10226-2(ISO7-1) formerly BS 21
- ISO 228-1 parallel thread
- Medium: Water

Materials

NO.	PART	Materials
1	Body	DZR Brass CW602N
2	Gate	Brass
3	Washer	PTFE
4	Bonnet	DZR Brass CW602N
5	O-ring	EPDM
6	Stem	Brass
7	Washer	Brass
8	Packing	PTFE
9	Packing nut	Brass
10	Hand wheel	Cast Iron / Alumium
11	Name plate	Alumium
12	Nut	SS 304

Dimensional Drawing

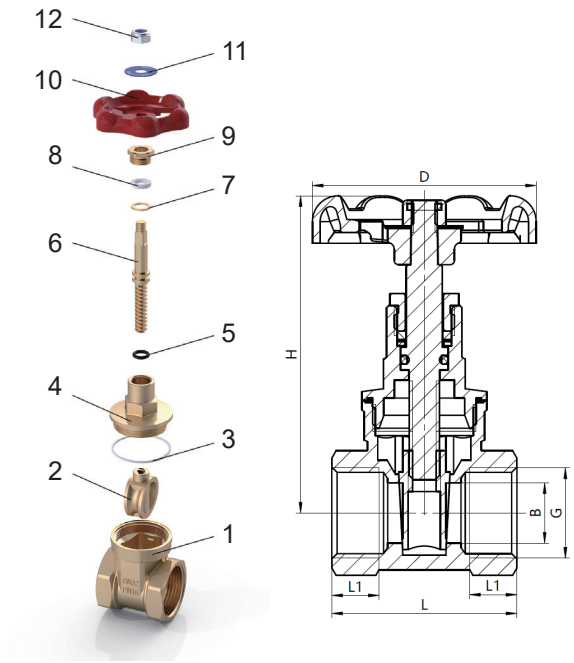

Dimensions

SIZE (inch)	L (mm)	L1 (mm)	H (mm)	B	D (mm)
1/2"	43	11	74	Φ14	Φ52
3/4"	46	11	82	Φ18	Φ52
1"	53	14	92	Φ23	Φ56
1-1/4"	56	14	103	Φ27	Φ72
1-1/2"	60	15	120	Φ33	Φ72
2"	70	18	139	Φ43	Φ78

Pressure & temperature ratings

