HC-95401

Resilient-Seated Gate Valve *PN16*

Feature & Benifits

- Bigger sizes upon request
- Gearbox operation upon request
- Rising stem



Test Pressure & Temperature

Tempreture	Hydraulic
0°C to 80°C	Seat: 24 bar
	Seat: 17.6 bar

Connection Standard

- Design and manufacture as per BS5163
- Flanged to EN 1092-2

Materials

NO.	Part	Materials
1	Body	Ductile Iron
2	Disc	EPDM+Ductile Iron
3	Gasket	NBR
4	Stem	AISI420
5	Bonnet	Ductile Iron
6	Gland	Ductile Iron
7	Bolt	AISI304
8	Washer	AISI304
9	Nut	AISI304
10	Handwheel	Ductile Iron
11	Stem Nut	CuZn39Pb1 Brass
12	Friction Pads	AISI304
13	Yoke	Ductile Iron
14	Gasket	POM
15	O-Ring	NBR
16	O-Ring	NBR
17	Washer	Phenolic
18	Disc Core	Ductile Iron

Dimensional Drawing

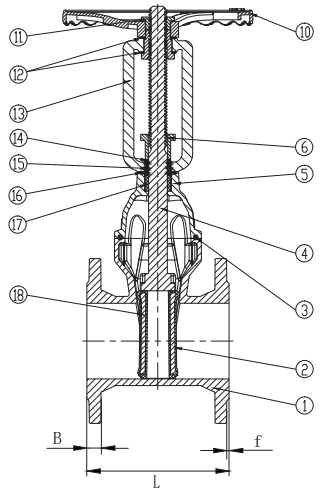

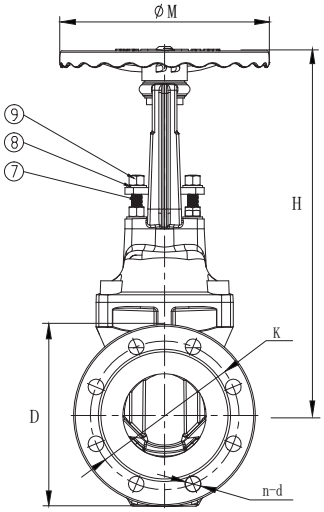

Dimensions

Size	Outline(mm)			Valve Flange dimensions(mm)					Switch Turns
	L	ΦM	H	BS4504/EN1092-2, PN16					
DN	BS5163			D	K	n-d	B	f	
DN65	190	Φ200	350	185	145	4-Φ19	19	3	17
DN80	203	Φ200	375	200	160	8-Φ19	19	3	20
DN100	229	Φ254	450	220	180	8-Φ19	19	3	21
DN125	254	Φ315	510	250	210	8-Φ19	19	3	26
DN150	267	Φ315	585	285	240	8-Φ23	19	3	26
DN200	292	Φ315	735	340	295	12-Φ23	20	3	34
DN250	330	Φ406	875	405	355	12-Φ28	22	3	43
DN300	356	Φ406	1015	460	410	12-Φ28	24.5	4	51
DN350	381	Φ500	1210	520	470	16-Φ28	26.5	4	51
DN400	406	Φ500	1335	580	525	16-Φ31	28	4	58
DN450	432	Φ650	1515	640	585	20-Φ34	30	4	65
DN500	457	Φ650	1600	670	650	20-Φ34	31.5	4	73