# HC-89901DR

DZR Brass Ball Valve ***PN25***



## Feature & Benefits

- Full port
- Europe DZR Brass 12164 CW602N Dezincification Resistant Brass prevents corrosion and fungal growth
- Designed to be light, compact and easy to install and operate
- Steel lever handle with anti-corrosion treatment and Blue PVC coating
- Valves are Tested in Accordance with BSEN 13828 standards

## Test Pressure & Temperature

| Temperature | Hydraulic |
|---|---|
| -20°C to 120°C | Shell: 37.5 bar |
| | Seat: 27.5 bar |

## Connection Standard

- ISO228-1 parallel thread
- Medium: Water

## Materials

| NO. | PART | Materials |
|---|---|---|
| 1 | Nut | Steel |
| 2 | Lever handle | Steel |
| 3 | Packing nut | Brass |
| 4 | Packing | PTFE |
| 5 | Stem nickle plated | Brass |
| 6 | Ball chrome plated | Brass |
| 7 | Seats | PTFE |
| 8 | Bonnet nickle plated | Brass DZR |
| 9 | Body nickle plated | Brass DZR |

## Dimensional Drawing

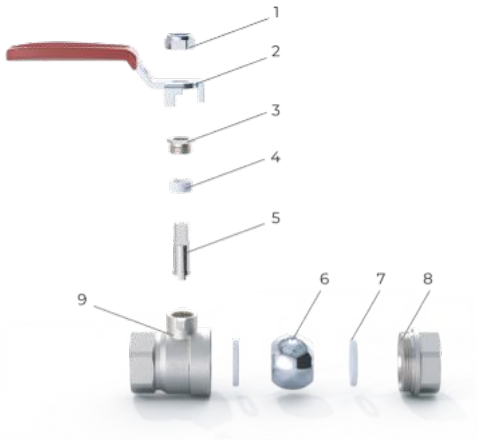


## Dimensions

| SIZE (inch) | L (mm) | L1 (mm) | H (mm) | d (mm) | D (mm) |
|---|---|---|---|---|---|
| 1/2" | 47.2 | 11.5 | 47.7 | Φ25 | Φ86 |
| 3/4" | 56.4 | 13 | 52.2 | Φ31 | Φ86 |
| 1" | 64 | 14 | 63.9 | Φ37.5 | Φ112 |
| 1-1/4" | 77.4 | 15.5 | 72.1 | Φ46.5 | Φ140 |
| 1-1/2" | 86.2 | 16 | 78.9 | Φ54 | Φ140 |
| 2" | 102 | 17 | 95 | Φ67 | Φ162 |

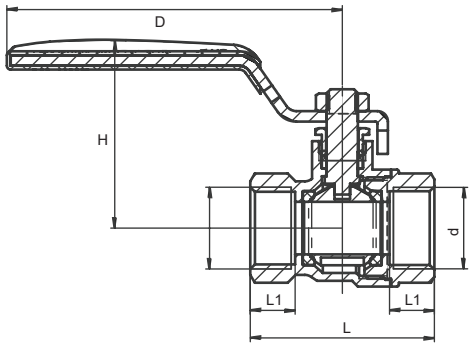


## Pressure & temperature ratings

