HC-80081

Bronze Full Port Ball Valve ***PN40***

Feature & Benefits

- Robust and high quality bronze body with integral seating surfaces.
- Full port
- Steel lever handle with anti-corrosion treatment and Blue PVC coating
- Light and compact for easy installation
- Valves are Tested in Accordance with MSS-SP-110



Test Pressure & Temperature

Temperature	Hydraulic
-20°C to 120°C	Shell: 60 bar
	Seat: 44 bar

Connection Standard

- US END CONNECTION: ANSI B1.20.1
- ISO228-1 parallel thread
- Medium: Water
- UK END CONNECTION: Taper threaded to BS EN10226-2(ISO7-1)formerly BS 21

Material

NO.	Part	Material
1	Body	Bronze
2	Seal	PTFE
3	Ball	Brass
4	Bonnet	Bronze
5	Stem	Brass
6	O-ring	EPDM
7	Packing	PTFE
8	Nut	Brass
9	Handle	Steel
10	Nut	Stainless Steel

Dimensional Drawing

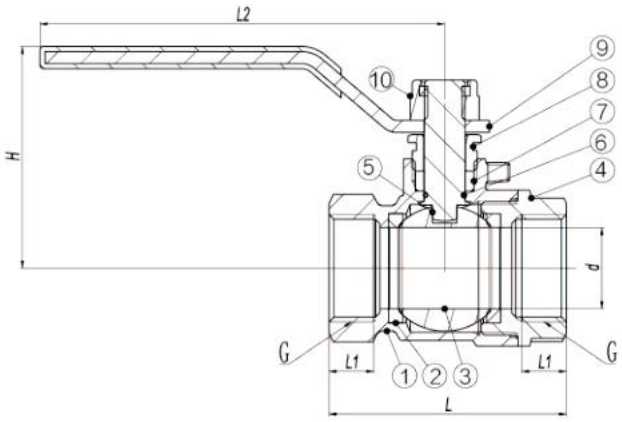

Dimensions

SIZE (inch)	L (mm)	L1 (mm)	H (mm)	d (mm)	L2 (mm)	G
1/2"	53.6	12	47	15	89	1/2"
3/4"	58.5	11	55	20	100	3/4"
1"	71	15	62	25	121	1"
1-1/4"	77	13	69	30	121	1-1/4"
1-1/2"	93	18	82	38	148	1-1/2"
2"	109	17	93	50	145	2"

Pressure & temperature ratings

