HC-04033DR

DZR Swing Check Valve **PN20**



Feature & Benefits

- Check valves permit flow in one direction only and close automaically if flow reverses
- Entirely automatic in action, depending upon pressure and velocity of flow within the line to perform their functions of opening and closing
- Check Valves should only be used in horizontal pipe runs
- CW617N material is available HC-04033

Pressure & Temperature

Temperature	Hydraulic
-20°C+ 120°C	Shell : 30bar
	Seat : 22bar

Connection Standard

- ISO228-1 parallel thread
- Medium: Water

Materials

NO.	PART	Materials
1	Body	DZR Brass CW602N
2	Washer	EPDM
3	Bonnet	DZR Brass CW602N
4	Gate	DZR Brass CW602N
5	Pin	Brass
6	Screw	Brass

Dimensional Drawing

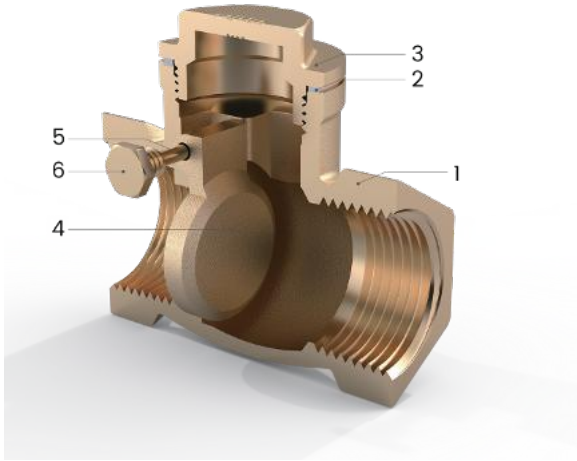

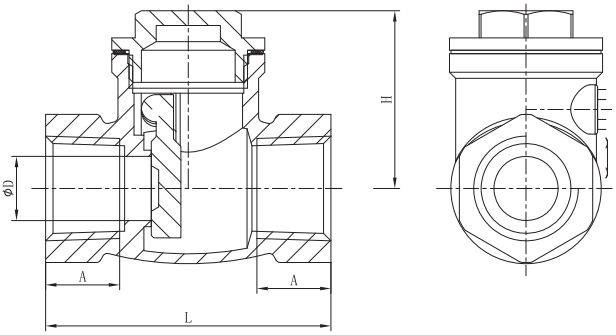

Dimensions

SIZE (inch)	A	B (mm)	C (mm)	L (mm)	H (mm)
1/2"	1/2"	15	12	49	33
3/4"	3/4"	18	12	54	37
1"	1"	23	14	69	44
1-1/4"	1-1/4"	30	14	76	54
1-1/2"	1-1/2"	36	15	85	62
2"	2"	44	15	94	70

Pressure & temperature ratings

