HC-50902

Brass Pressure Reducing Valve ***PN25***

Feature & Benefits

- WRAS Certified
- Europe Brass CW617N
- Maximum inlet pressure 25 bar
- adjustable outlet 0.5 bar to 6 bar
- nickel plated brass finish
- two outlet gauge points
- Maximum inlet tempreture



Test Pressure & Temperature

Temperature	Hydraulic
-10°C to 85°C	Shell: 37.5 bar
	Seat: 27.5 bar

Connection Standard

- ISO228-1 parallel thread
- Medium: Water

Materials

NO.	PART	Materials
1	Adjustable Nut	Brass CW617N
2	O-Ring	EPDM
3	Spring	AISI 304
4	Bonnet	Brass CW617N
5	O-Ring	EPDM
6	Screw Rod	Brass
7	O-Ring	EPDM
8	Body	Brass CW617N
9	Gasket	EPDM
10	Plug	Brass
11	Gasket	EPDM
12	End Cap	Brass CW617N

Dimensional Drawing

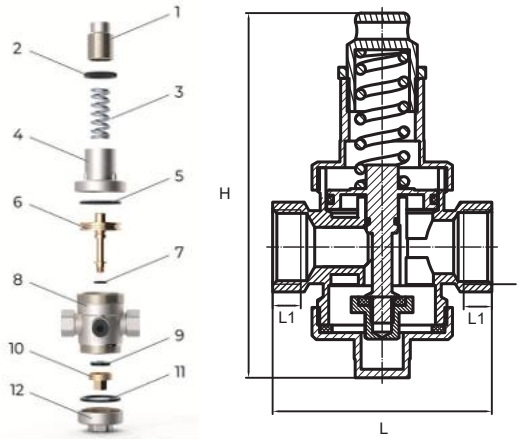

Dimensions

SIZE (inch)	L (mm)	L1 (mm)	H (mm)
1/2"	70	14.5	121
3/4"	80	14.5	121
1"	85	15	141
1 1/4"	105	17	159
1 1/2"	115	18.5	159
2"	120	22	175