HC-17042

DZR Pressure Reducing Valve ***PN16***

Feature & Benefits

- Europe DZR Brass 12164 CW602N Dezincification Resistant Brass
- Maximum inlet pressure 25 bar
- Adjustable outlet 0.1 bar to 0.6 bar
- Nickel plated brass finish



Test Pressure & Temperature

Temperature	Hydraulic
-10°C to 85°C	Shell: 24 bar
	Seat: 17.6 bar

Connection Standard

- ISO228-1 parallel thread
- Medium: Water
- Compression version supplied with ends complying with BS EN 1254-2

Materials

NO.	PART	Materials
1	Body	DZR Brass CW602N
2	Bonnet	DZR Brass CW602N
3	Spring	Stainless Steel
4	Adjustable Nut	Brass
5	Adjustable Bolt	Brass
6	Component	Brass
7	Gasket	Stainless Steel
8	Pressure Gauge	/
9	Nut	Brass
10	Capsule	H65

Dimensional Drawing

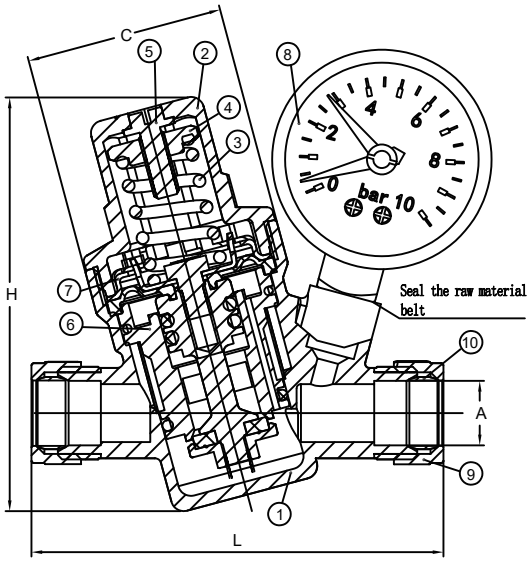

Dimensions

SIZE (inch)	L (mm)	H (mm)	C (mm)
15	96	96	Φ46
22	104	96	Φ46

Outlet Pressure and Flow Ratings

