HC-00022

DZR Commissioning Valve ***PN25***

Feature & Benefits

- WRAS Certified
- Europe DZR Brass 12164 CW602N Dezincification Resistant Brass
- Regulation, isolation and flow measurement functions
- Handle position indicator
- Meets BS 7350
- Include memory stop
- Include test points



Test Pressure & Temperature

Temperature	Hydraulic
-10°C to 85°C	Shell: 37.5 bar
	Seat: 27.5 bar

Connection Standard

- ISO228-1 parallel thread
- Medium: Water

Materials

NO.	PART	Materials
1	Body	DZR Brass CW602N
2	Connection cap	Brass
3	O-ring	EPDM
4	Bonnet	DZR Brass CW602N
5	O-ring	EPDM
6	Stem	BRASS
7	Circlip	Stainless Steel
8	Sealing plate screw rod	Brass
9	O-ring	EPDM
10	Lower Stem Nut	Brass
11	Binder Point-blue	Brass
12	Handlewheel	PA66
13	Adjusting Screw	Stainless Steel
14	Nylon Locking Nut	Stainless Steel
15	Fastener	ABS
16	Binder Point-red	Brass

Dimensional Drawing

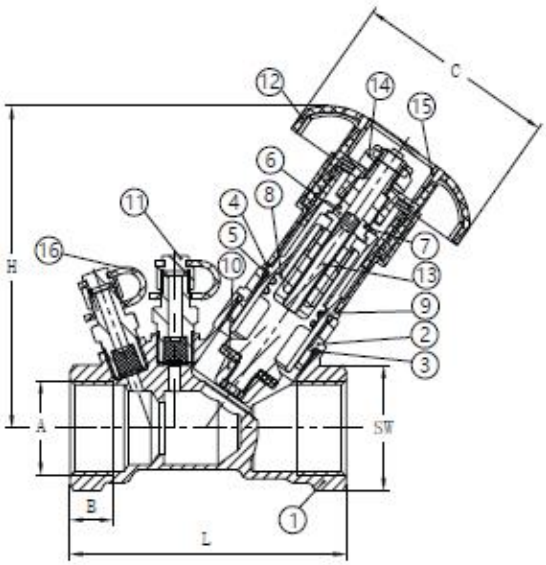

Installation Dimensions

SIZE (inch)	A	L (mm)	H (mm)	B (mm)	C (mm)	SW (mm)
15	1/2"	77	93	13	71	26
20	3/4"	82	100	14	71	31
25	1"	97	114	16.5	71	38
32	11/4"	115	122	20	71	49
40	11/2"	123	133	24.5	71	53
50	2"	145	136	27	71	66