HC-13612

Bronze Globe Valve **PN 25**

Feature & Benefits

- Robust and high quality bronze body with integral seating surfaces.
- Renewable non-metallic seat disc
- Female ends
- PTFE gland packed



Test Pressure & Temperature

Temperature	Hydraulic
-20°C to 120°C	Shell: 37.5 bar
	Seat: 27.5 bar

Material

NO.	Part	Material
1	Nut	304 SS
2	Plate	304 SS
3	Lower Seal Gasket	PTFE
4	O-Ring	EPDM
5	Body	Bronze C83600
6	DISC	Brass
7	Seal Ring	PTFE
8	Bonnet	Bronze
9	Stem	Brass
10	Packing Gland	PTFE
11	Brass Ring	Brass
12	Gland Nut	Brass
13	Name Plate	AL
14	Handle Nut	304 SS
15	Handlewheel	HT200

Connection Standard

- US END CONNECTION: ANSI B1.20.1
- ISO228-1 parallel thread
- UK END CONNECTION: Taper threaded to BS EN10226-2(ISO7-1)formerly BS 21
- Medium: Water

Dimensional Drawing

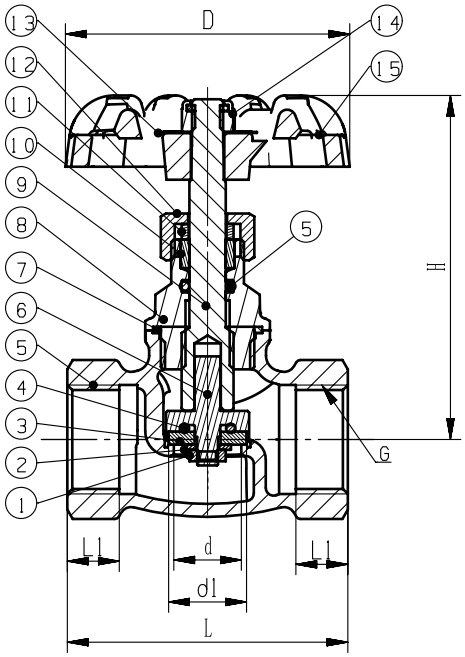

Dimensions

SIZE (inch)	L (mm)	L1 (mm)	H (mm)	d (mm)	d1 (mm)
1/2"	54	10	67	Φ13	Φ15
3/4"	58	11	67	Φ13	Φ15
1"	66	12	86.5	Φ18.5	Φ21
1-1/4"	75	14.5	86.5	Φ23	Φ25.5
1-1/2"	85	15	97	Φ31	Φ33.5
2"	101	17	109	Φ37	Φ39.5

Pressure & temperature ratings

