HC-25102

Lead Free Hose Bibs ***125PSI***



Feature & Benefits

- Leadfree Brass
- Design standard:CSA B125.1-11 Standard

Test Pressure & Temperature

Temperature	Hydraulic
5°C to 71°C	Shell: 187.5 PSI
	Seat: 137.5 PSI

Connection Standard

- US END CONNECTION: ANSI B1.20.1
- Medium: Water
- ISO228-1 parallel thread

Materials

NO.	PART	Materials
1	Nut	Stainless Steel
2	Name plate	Aluminum
3	Handwheel	Cast Iron
4	Adjustable nut	Brass
5	Rubber washer	EPDM
6	Washer	Stainless Steel
7	Stem	Brass
8	Rubber washer	EPDM
9	Body	C46500

Dimensional Drawing

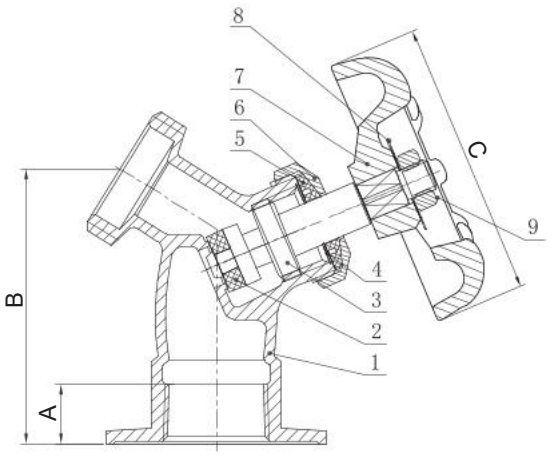

Dimensions

DN	A	B	C
15	12	53	58
20	17	53	58

Pressure & temperature ratings

