HC-20902

Lead Free Brass Hose Bibs **125PSI**



Feature & Benefits

- Multi Turn
- Rough Brass
- Zinc T- handle

Test Pressure & Temperature

Temperature	Hydraulic
5°C to 90°C	Shell: 187.5 PSI
	Seat: 137.5 PSI

Connection Standard

- US END CONNECTION: ANSI B1.20.1
- Medium: Water
- ISO228-1parallel thread

Dimensional Drawing

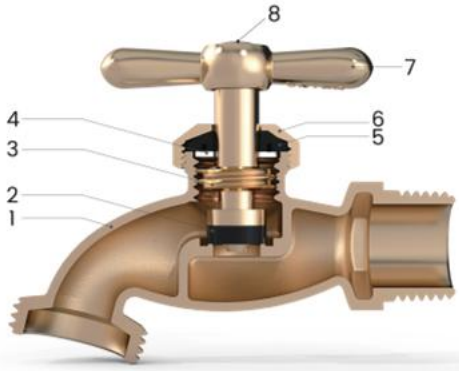

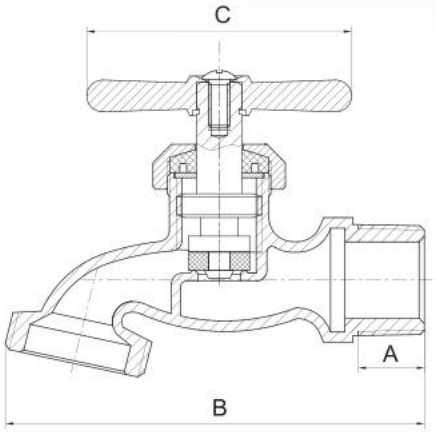

Materials

NO.	PART	Materials
1	Screw	Stainless Steel
2	Handle	ZN
3	Adjustable nut	Brass
4	Rubber washer	EPDM
5	Washer	Stainless Steel
6	Stem	Brass C46500
7	Rubber washer	EPDM
8	Body	Brass C46500

Dimensions

DN	A	B	C
15	14	85	50
20	14	89	52

Pressure & temperature ratings

