HC-93001

Round Handle Brass Angle Valve ***PN10***

Feature & Benefits

- Europe Brass CW617N
- Quarter turn angle valve with a polished chrome finish



Choose Finish:



Test Pressure & Temperature

Temperature	Hydraulic
-10°C to 90°C	Shell: 24 bar
	Seat: 17.6 bar

Connection Standard

- ISO228-1 parallel thread
- Medium: Water

Materials

NO.	PART	Materials
1	Body	Brass CW617N
2	Handle	ABS
3	Screw	304
4	Stem	Brass CW617N
5	O ring	EPDM
6	Gasket	EPDM
7	Flat gasket	PTFE
8	Rubber ring	EPDM
9	Gasket	Brass
10	Circlip	Brass
11	Bonnet	Brass CW617N
12	Decorative cover	304

Dimensional Drawing

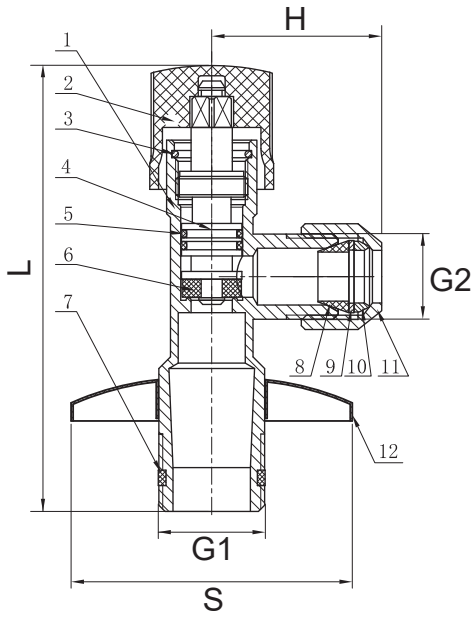

Dimensions

SIZE (inch)	L (mm)	S (mm)	H (mm)	G1	G2
1/2"x3/8"	86	55	32	1/2"	3/8"

Pressure & temperature ratings

