HC-20102

Bronze Stop Gate Valve ***PN16***

Feature & Benefits

- WRAS certified
- Robust and high quality bronze body
- Crutch top
- Compression x compression
- BS 1010



Test Pressure & Temperature

Tempreture	Hydraulic
-20°C to 120°C	Shell: 24 bar
	Seat: 17.6 bar

Connection Standard

- Compression version supplied with ends complying with BS EN 1254-2 for use with BS EN 1057 R250 (half hard)copper tube

Material

NO.	Part	Material
1	Body	Bronze
2	Gasket	EPDM
3	Stem	/
4	Gasket	PTFE
5	Bonnet	Bronze
6	Gland	PTFE
7	Adjustable Nut	Brass
8	Handle	Brass
9	Nut	Steel
10	Ferrule	H65
11	Hexagon Nut	Brass

Dimensional Drawing

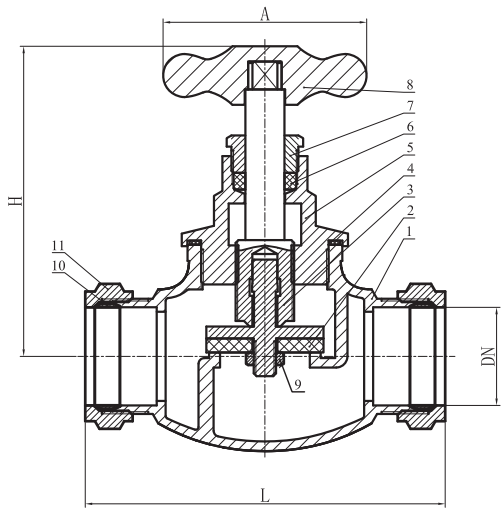

Dimensions

SIZE (inch)	H (mm)	A (mm)	DN (mm)	L (mm)
35mm	110	73	35	129
42mm	134	80	42	140
54mm	149	93	54	168

Pressure & temperature ratings

