HC-10014

Thermostatic Mixing Valve

Application

- Thermostatic mixing valves of this type are used for central regulation of the water temperature in solar-powered, bivalent water heaters.

Feature & Benefits

- Thermostat controls both hot and cold water
- Prevents scalding by accurately controlling the water temperature
- Approved at high and low pressure designations for single outlet



TYPE A TYPE B

Technical Data

Media	HC-10014			
Medium:	Water			
Connections/Sizes				
Connection size	1/2"	3/4"	1"	11/4"
Pressure values				
Max. operating pressure:	max. 14 bar			
Maximum pressure	2.5 bar			
Operatingtemperatures				
Max. hot water inlet	110°C			
Setting range	30-65°C			
Preset temperature during	41°C			
Control accuracy:	<±4K			
Specifications				
Specifications	76L/min			
Installation position	Arbitrary			
Material	DZR CW602N			

Connection Standard

- UK END CONNECTION:Taper threaded to BS
- EN10226-2(ISO7-1)formerly BS 21
- ISO228-1 parallel thread
- US END CONNECTION: ANSI B1.20.1
- Available in pex, quick-connect, cpvc end, w/press

Dimensional Drawing

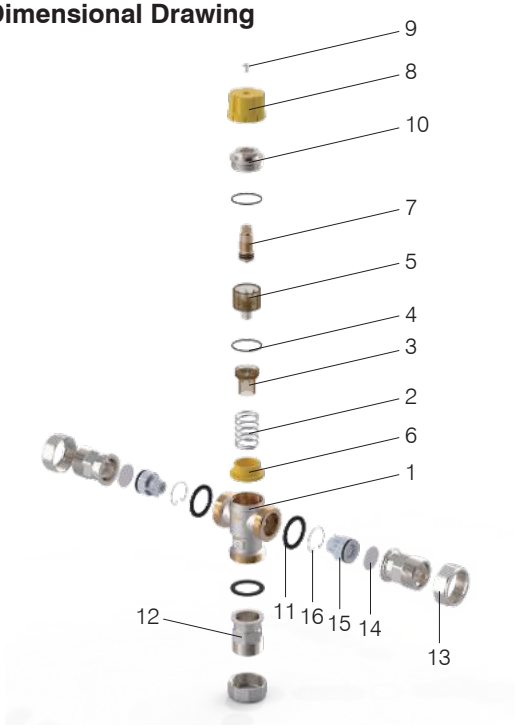

Materials

NO.	PART	Materials	NO.	PART	Materials
1	Body	CW602N	9	Screw	Steel
2	Bonnet	CW602N	10	Packing	Brass
3	Spring	Stainless Steel	11	Gasket	EPDM
4	Bushing	PSU	12	Union	CW602N
5	Temperature Sensor	PSU/T2	13	Nut	CW602N
6	O-ring	EPDM	14	Screen	Stainless Steel
7	Stem part	CW602N/SS/EPDM	15	Core	/
8	Handwheel	ABS	16	Circlip	Stainless Steel

Temperature rang

ITEM	MIN	1	2	3	4	5	6	7	MAX
HC-10014	30	34	38	43	47	51	56	60	65

Installation Dimensions

SIZE (inch)	L (mm)	H (mm)	d
1/2"	148	160	1/2"
3/4"	148	160	3/4"
1"	158	165	1"
11/4"	185	178	11/4"

