TECHNICAL DATASHEET

DZR BRASS COMMISSIONING VALVE

HOME CREATOR



Item No.: HC-00022

1 CERTIFICATION INFORMATION

Declaration of conformity: WRAS approved Commissioning valve, Confirmation of the approval can be obtained from the WRAS Approvals Directory.

Approval Number: 241202078

2 PRODUCT BASICS

Product Name: WRAS APPROVED BALNCING VALVE (FXF series)

Purpose: It is used as a shut-off valve in pipeline systems (water supply, household drinking, heating), transporting any media that are not aggressive to the materials of the product.

Manufacturer (supplier): HOME CREATOR GROUP LTD.

3 MAIN TECHNICAL DATA AND CHARACTERISTICS

3.1 SPECIFICATIONS

Table 1

No.	Characteristic	unit change	Meaning
1	Average total service life	years	15 years
2	Maintainability		repairable
3	Average full resource (from position 0 to 100)	cycles	12000
4	Mean time between failures (from position 0 to 100)	cycles	6000
5	Operating pressure	Bar	20
6	Test pressure	Bar	30
7	Working environment temperature		110
8	Nominal diameter range	inches	1/2", 3/4", 1", 11/4", 11/2", 2"
9	Tuning scale range	meaning	0-99
10	Conditional capacity (Kv 99) in position 99 for diameters:		
10.1	1/2"	m³/hour	1.6
10.2	3/4"	m³/hour	3.81
10.3	1"	m³/hour	5.5
10.4	1 1/4"	m³/hour	8.9
10.5	1 1/2"	m³/hour	18.5
10.6	2"	m³/hour	25.9

3.2 MATERIAL OF MANUFACTURE AND CONSTRUCTION

Female-Female thread (FxF)

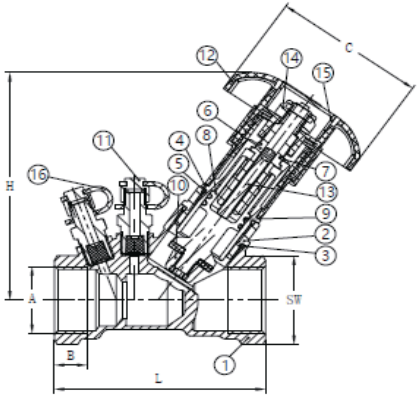

Table 2

No.	Name	Material
1	Body	DZR Brass
2	Connection cap	Brass
3	O-ring	EPDM
4	Bonnet	DZR Brass
5	O-ring	EPDM
6	Stem	Brass
7	Circlip	Stainless Steel
8	Sealing plate screw rod	Brass
9	O-ring	EPDM
10	Lower Stem Nut	Brass
11	Binder Point-blue	Brass
12	Handlewheel	PA66
13	Adjusting Screw	Stainless Steel
14	Nylon Locking Nut	Steel
15	Fastener	ABS
16	Binder Point-red	Brass

1. HOME CREATOR brass products are made by hot stamping of brass grade DZR brass as per the British standard CZ132.
2. The Rubber Mat is made of EP8018F EPDM according to European standards.

3.3 HYDRAULIC CHARACTERISTIC

Table 3

Scale value	Kv value (m^\hour) for DN					
	1/2"	3/4"	1"	1-1/4"	1-1/2"	2"
0	0	0	0	0	0	0
0.5	0.14	1.71	1.46	2.66	3.29	7.41
1	0.46	2.65	2.02	3.66	5.78	10.3
1.5	0.72	3.1	2.63	4.56	8	13.06
2	0.99	3.35	2.97	5.5	10.27	15.61
2.5	1.17	3.55	3.41	6.28	12.64	18.39
3	1.5	3.77	4.03	7.31	14.51	21.19
3.5	1.81	3.99	5.05	8.48	16.04	23.65
4	1.83	4.14	6.01	9.51	17.17	25.95

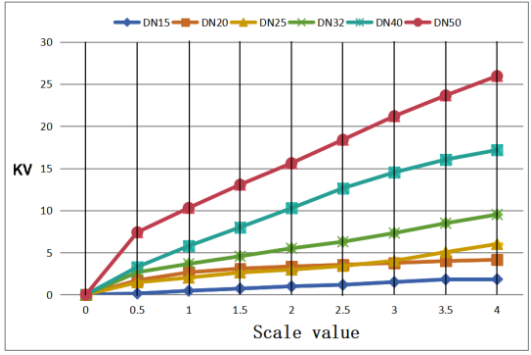

Note:

1. Intermediate values are found by interpolation.
2. At positions 0, 1,2 Ku for valves of all diameters is equal to 0 (sample of elasticity of the spool gasket).
   Here is an example of setting up a table:
   it is required to adjust the pressure difference Δp=0.12 bar on the valve DN=3/4" at a flow rate in the riser Q=0.78 m3/hour;
   Calculate the flow rate through the valve
   Kv=Q/$\sqrt{\Delta P}$=0.78/√0.12=2.25$m3$ time
   According to the settings table, the nearest values are 20 (2.19) and 25 (2.55), the difference is where it is needed.
   20+(2,25-2,19:((2,55-2,19)/25-20))= 20

3.4 COMMISSIONING VALVE HANDLE

Female-Female thread (FxF)



3.5 CROSS SECTION

Female-Female thread (FxF)

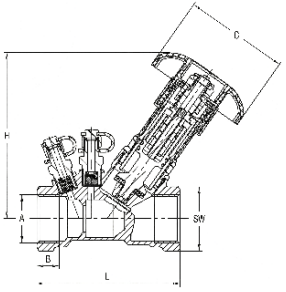

Table 4

Item	DN	A(Thread)	L (mm)	H (mm)	B (mm)	C (mm)	SW (mm)
HC-00022	15	1/2"	77	93	13	71	26
HC-00022	20	3/4"	82	100	14	71	31
HC-00022	25	1"	97	114	17	71	38
HC-00022	32	1 1/4"	115	122	20	71	49
HC-00022	40	1 1/2"	123	133	25	71	53
HC-00022	50	2"	145	136	27	71	66

4 INSTALLATION AND OPERATION

4.1 Installation of a Commissioning valve should be carried out by a specialist or a specialized organization in accordance with the Installation Requirement Notes (IRNs) "WRAS water regulation approval schedule".
4.2 The direction of flow of the working fluid must coincide with the direction of the arrow on the valve body.
4.3 Valves should be installed at the end of the regulated circuit, thereby reducing the likelihood of airing.
4.4 When installing valves, it is prohibited to apply torques exceeding the values indicated in the table:

Thread, inches	1/2"	3/4"	1"	1-1/4"	1-1/2"	2"
Extreme twist, Nm	30	40	50	60	70	80

4.5 When installing self-sealing measuring nipples instead of plugs, no additional sealing material is required.
4.6 After installation is completed, the system must be tested with hydrostatic pressure exceeding the operating pressure by 1.5 times for 10 minutes.

5 DESCRIPTION AND WORK

5.1 Product should be operated in accordance with the pressures and temperatures in the Technical Specifications Table It is not allowed to operate the valve with the handle screw removed or loose.
5.2 Solvents, paints and other substances that are corrosive to the handle material are not allowed on the valve handle.
5.3 The working medium in the valve is not allowed to freeze.

6 MAINTENANCE

6.1 Articles must be operated within the values specified in para. 3, para. 4 of this technical passport.
6.2 To extend the service life of sealing elements, it is recommended to open / close the HOME CREATOR Commissioning valve at least 1 time in 6 months.

7 STORAGE AND TRANSPORTATION CONDITIONS

Products are transported in the packaging of the manufacturer in accordance with the rules operating on the mode of transport used.

8 RESOURCES, LIFETIMES AND MANUFACTURER'S (SUPPLIER'S) WARRANTIES

8.1 Average full service life of a Commissioning valve: 15 years.
8.2 The manufacturer (supplier) guarantees the operability and compliance with the safety requirements of the product if the consumer complies with this technical passport HC-00022.
8.3 Warranty period: 5 years from the date of sale to the end user / from the date of commissioning of the object. The warranty covers all defects caused by the manufacturer.
8.4 When making claims about the quality of the goods, the buyer provides the following documents:
8.4.1 An application in any form, which indicates:
a) Name of the organization or F. And. About. buyer, actual address, contact phone number;
b) The name and address of the organization that carried out the installation of the product; c) a brief description of the malfunction of the product.
8.4.2 A document confirming the purchase of the product (cash/sales receipt, waybill, receipt, etc.).
8.4.3 Photos of the product confirming its malfunction, or the product itself.
8.4.4 Act of hydraulic testing of the system in which the product was mounted.
8.4.5 Completed warranty card.
8.5 The warranty does not cover defects arising from:
8.5.1 Violations of the passport regimes of storage, transportation, installation and operation of the product.
8.5.2 The presence of traces of extraneous interference in the design of the product.
8.5.3 Effects of substances aggressive to the materials of the product.
8.5.4 Effects on the product of excessive force.
8.5.5 Impact on the product of fire, natural disasters and other force majeure circumstances.
8.6 The warranty also does not apply in cases where the manufacturer's markings are partially or completely changed, erased, removed or illegibly visible.
8.7 In case of unreasonableness of the claim, the costs of diagnostics and examination of the product are paid by the buyer.
8.8 Manufacturer HOME CREATOR GROUP LTD reserves the right to make changes to the design of the product that do not affect the declared technical characteristics.
8.9 Claims for the quality of the goods can be made during the warranty period at the address of the manufacturer HOME CREATOR GROUP LTD.

9 CERTIFICATE OF ACCEPTANCE AND PACKAGING

9.1 Commissioning valves packed by the manufacturer.
9.2 Packaging ensures the safety of products subject to compliance with clause 7.
9.3 The materials and substances used for packaging are safe for people and the environment.
9.4 The Commissioning valve is in the open position.
9.5 The batch of Commissioning valves is recognized as suitable for operation and is accepted with 100% control at RPR = 2.5 * PW.

Date of manufacture		QUALITY Mark	

10 **NOTE**

WARRANTY CARD No _____

Name: DZR BRASS COMMISSIONING VALVE

Article: HC-00022 Quantity: _____

Name and Address of the trading organization: _____

Date of Sale: _____ Seller's full name / Seller's signature, Stamp / seal of the trading organization: _____

I agree with the terms of the warrant: _____

Product Return Mark: _____

Buyer's signature: _____

View your passport Online:

Date / Signature: _____

WARRANTY PERIOD: 5 YEARS

Warranty is provided.
according to paragraph 8 of the technical passport HC-00022

HOME CREATOR GROUP LTD | LONDON, UK
Add: 167-169 Great Portland Street, London,
W1W 5PF, United Kingdom
Web: www.homecreatorgroup.com
Tel: +971 558432055