TECHNICAL DATASHEET

WRAS APPROVED FLOAT VALVE

HOME CREATOR

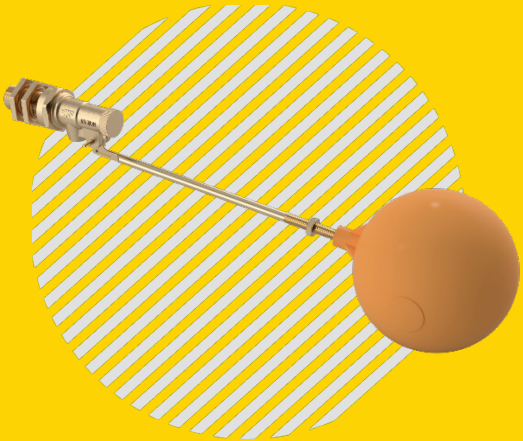

Item No.: HC-10172

1 CERTIFICATION INFORMATION

Declaration of conformity: WRAS approved float valve. Confirmation of the approval can be obtained from the WRAS Approvals Directory. (www.wras.co.uk/directory)

Approval Number: 260302704

2 PRODUCT BASICS

Product Name: WRAS APPROVED FLOAT VALVE

Purpose: The float valve has the function of automatically opening and closing the pipeline to control the water level.

Manufacturer (supplier): HOME CREATOR GROUP LTD.

3 MAIN TECHNICAL DATA AND CHARACTERISTICS

3.1 SPECIFICATIONS

Table 1

Connection thread, Inch	1/2 "	3/4"	1"	1 1/4"	1 1/2"	2"	21/2"	3"	4"	6"
Nominal pressure PN, Bar	16 bar		14 bar							
Working temperature range, °C	-10 °C to 85 °C									
Seal tightness	**17.6** bar		**15.4** bar							
Connection thread (ISO228-1)	Parallel									
Average full service life	30 years old									
Average full resource	200,000 cycles									

3.2 MATERIAL OF MANUFACTURE AND CONSTRUCTION

Table 2

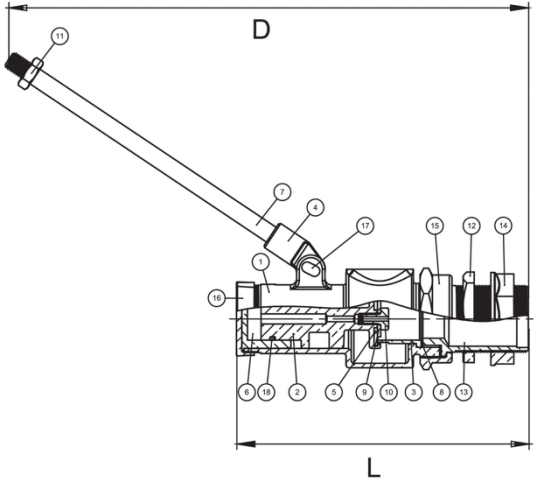

No.	Name	Material
1	Body	Brass 1/2" & 3/4, bronze 1" to 6"
2	Piston	Bronze
3	Seat	Bronze
4	Lever Heel	Bronze
5	Piston Washer	EPDM EP70
6	Piston Guide	Bronze
7	Lever Arm	Brass
8	Sealing Washer	EPDM EP70
9	Retaining Washer	Stainless Steel
10	Retaining Bolt	Stainless Steel
11	Lever Nut	Brass
12	Fixed Flange Cknut	Bronze
13	Inlet Shank	Bronze
14	Loose Backnut	Bronze
15	Coupling Nut	Bronze
16	Body Cap	Bronze
17	Split Pin	Brass
18	O-Ring	EPDM

1. HOME CREATOR brass products are made by hot stamping of brass grade CW617N for 1/2" & 3/4" and Bronze for 1" to 6" as per the European standard EN12165.
2. The Rubber Mat is made of N7118F NBR according to European standards.

3.3 FLOAT VALVE

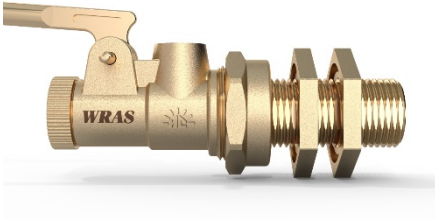

3.4 CROSS SECTION

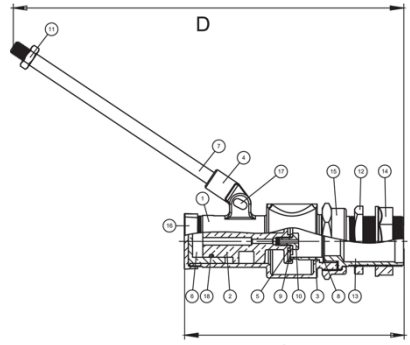

Table 3

Item	DN	Size	Plastic Ball	Copper Ball	Overall dimensions, mm		
					G	A	L
HC-10172	15	1/2"	4 1/2" x 5/16" W	4 1/2" x 5/16" W	1/2"	293.5	103.5
HC-10172	20	3/4"	5" x 5/16" W	5" x 5/16" W	3/4"	450	134
HC-10172	25	1"	6" x 7/16" W	6" x 7/16" W	1"	506.4	159.4
HC-10172	32	1 1/4"	8" x 9/16" W	8" x 9/16" W	1 1/4"	299	209
HC-10172	40	1 1/2"	10" x 9/16" W	10" x 9/16" W	1 1/2"	298	209
HC-10172	50	2"	12" x 5/8" W	12" x 5/8" W	2"	374	262
HC-10172	65	21/2"	Not recommended	12" x 9/16" W	21/2"	473	235
HC-10172	80	3"	Not recommended	14"x3/4" W	3"	523	277
HC-10172	100	4"	Not recommended	14"x3/4" W	4"	493	331
HC-10172	150	6"	Not recommended	16"x7/8"W	6"	541	432

4 INSTALLATION AND OPERATION

4.1 Before installing the float valve, remove impurities from the water pipe.
4.2 A ball valve should be installed at the front end of the water inlet pipe to facilitate future maintenance.
4.3 Open the ball valve at the front end of the pipeline, check whether the connection points of the float valve are leaking, and whether the float is open and closed normally.
4.4 Be careful not to use the connecting rod part as the focus to avoid damaging the product performance.
4.5 Fit the ball float to the end of the float valve and secure by tightening the nut up against the ball float connection. (Picture 1)
4.6 Check the pin securing the float arm to the valve is fitted correctly and not able to fall out. (Picture 2)

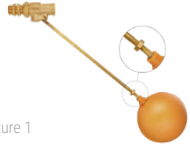

Picture 1

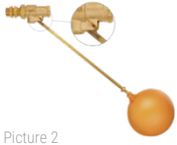

Picture 2

4.7 Remove one of the backing nuts from the inlet shank. (Picture 3)
4.8 Fit the valve to the cistern. (Picture 4)



Picture 3

Picture 4

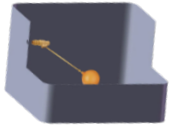

4.9 Fit the backing nut to the shank on the outside of the cistern. Do not over tighten the nut. See details on positioning in the image below. (Picture 5)
4.10 Secure the water supply pipe to the valve inlet and tighten with spanner Do not over tighten. Turn on the water supply and check for leaks and for correct operation. (Picture 6).

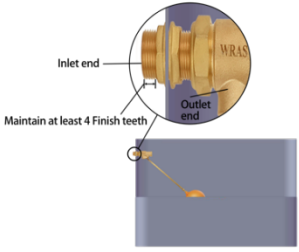

Picture 5

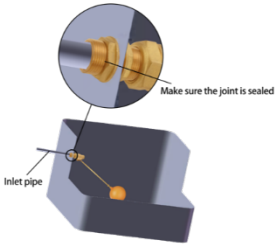

Picture 6

5 DESCRIPTION AND WORK

Floating ball valves always float on the water, and when the water rises, the float also rises. Floating ball valve rises to drive the connecting rod to rise. The connecting rod is connected with the valve at the other end. When it rises to a certain position, the connecting rod supports the rubber piston pad and closes the water source. When the water level drops, the floating ball valve also drops, and the connecting rod drives the piston pad to open.

6 MAINTENANCE

6.1 Articles must be operated within the values specified in para. 3, para. 4 of this technical passport.
6.2 To extend the service life of sealing elements, it is recommended to open / close the HOME CREATOR float valve at least 1 time in 6 months.

7 STORAGE AND TRANSPORTATION CONDITIONS

Products are transported in the packaging of the manufacturer in accordance with the rules operating on the mode of transport used.

8 RESOURCES, LIFETIMES AND MANUFACTURER'S (SUPPLIER'S) WARRANTIES

8.1 Average full service life of a float valve: 30 years.
8.2 The manufacturer (supplier) guarantees the operability and compliance with the safety requirements of the product if the consumer complies with this technical passport HC-10172.
8.3 Warranty period: 5 Years from the date of sale to the end user / from the date of commissioning of the object. The warranty covers all defects caused by the manufacturer.
8.4 When making claims about the quality of the goods, the buyer provides the following documents:
8.4.1 An application in any form, which indicates:
a) Name of the organization or F. And. About. buyer, actual address, contact phone number;
b) The name and address of the organization that carried out the installation of the product; c) a brief description of the malfunction of the product.
8.4.2 A document confirming the purchase of the product (cash/sales receipt, waybill, receipt, etc.).
8.4.3 Photos of the product confirming its malfunction, or the product itself.
8.4.4 Act of hydraulic testing of the system in which the product was mounted.
8.4.5 Completed warranty card.
8.5 The warranty does not cover defects arising from:
8.5.1 Violations of the passport regimes of storage, transportation, installation and operation of the product.
8.5.2 The presence of traces of extraneous interference in the design of the product.
8.5.3 Effects of substances aggressive to the materials of the product.
8.5.4 Effects on the product of excessive force.
8.5.5 Impact on the product of fire, natural disasters and other force majeure circumstances.
8.6 The warranty also does not apply in cases where the manufacturer's markings are partially or completely changed, erased, removed or illegibly visible.
8.7 In case of unreasonableness of the claim, the costs of diagnostics and examination of the product are paid by the buyer.
8.8 Manufacturer HOME CREATOR GROUP LTD reserves the right to make changes to the design of the product that do not affect the declared technical characteristics.
8.9 Claims for the quality of the goods can be made during the warranty period at the address of the manufacturer HOME CREATOR GROUP LTD.

9 CERTIFICATE OF ACCEPTANCE AND PACKAGING

9.1 Float valves packed by the manufacturer.
9.2 Packaging ensures the safety of products subject to compliance with clause 7.
9.3 The materials and substances used for packaging are safe for people and the environment.
9.4 The float valve is in the open position.
9.5 The batch of float valves is recognized as suitable for operation and is accepted with 100% control at RPR = 2.5 * PW.

Date of manufacture		QUALITY Mark	

10 NOTE

WARRANTY CARD No _____

Name: WRAS APPROVED FLOAT VALVE

Article: HC-10172 Quantity: _____

Name and Address of the trading organization: _____

Date of Sale: _____ Seller's full name / Seller's signature, Stamp / seal of the trading organization: _____

I agree with the terms of the warrant: _____

Product Return Mark: _____

Buyer's signature: _____

Date / Signature: _____

View your passport Online:

WARRANTY PERIOD: 5 YEARS

Warranty is provided.
According to paragraph 8 of the technical passport HC-10172

HOME CREATOR GROUP LTD | LONDON, UK
Add: 167-169 Great Portland Street, London,
W1W 5PF, United Kingdom
Web: www.homecreatorgroup.com
Tel: +971 558432055