TECHNICAL DATASHEET

THERMOSTATIC MIXING VALVE

HOME CREATOR



Item No.: HC-10014

1 CERTIFICATION INFORMATION

Declaration of conformity: WRAS approved mixing valve. Confirmation of the approval can be obtained from the WRAS Approvals Directory.

Approval Number: 241002113

2 PRODUCT BASICS

Product Name: Thermostatic Mixing Valve

Purpose: Thermostatic mixing valves of this type are used for central regulation of the water temperature in solar-powered, bivalent water heaters.

Manufacturer (supplier): HOME CREATOR GROUP LTD.

3 MAIN TECHNICAL DATA AND CHARACTERISTICS

3.1 SPECIFICATIONS

Table 1

Medium:	Solar System			
Connection Sizes	1/2"	3/4"	1"	1 1/4"
Max. operating pressure	max. 14 bar			
Maximum pressure	2.5 bar			
Max. hot water inlet	110°C			
Setting range	30-65°C			
Preset temperature during	41°C			
Control accuracy	< ±4K			
Flow rate	76L/min			
Installation position	Arbitrary			
Material	DZR CW602N			

3.2 MATERIAL OF MANUFACTURE AND CONSTRUCTION OF THERMOSTATIC MIXING VALVE

Male-Male thread (MxM)

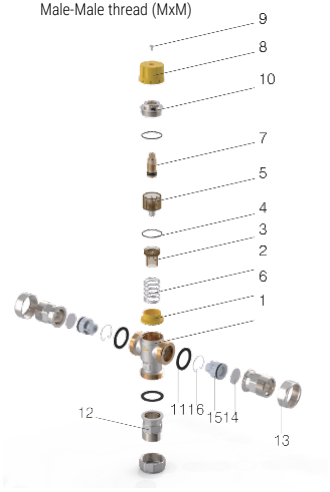

Table 2

No	Name	Material	No	Name	Material
1	Body	CW602N	9	Screw	Steel
2	Bonnet	CW602N	10	Packing	Brass
3	Spring	Stainless Steel	11	Gasket	EPDM
4	Bushing	PSU	12	Union	CW602N
5	Temperature Sensor	PSU/T2	13	Nut	CW602N
6	O-ring	EPDM	14	Screen	Stainless Steel
7	Stem part	CW602/SS/EPDM	15	Core	/
8	Handwheel	ABS	16	Circlip	Stainless Steel

1. HOME CREATOR valve body is made of DZR brass (CW602N), nickel-plated, in accordance with UNI EN 12165 standards for corrosion and dezincification resistance.
2. The piston is made of high-temperature PSU, the spring is stainless steel, and the sealing components are EPDM, ensuring reliable temperature control and durability.
3. Handle design and temperature lock can be customized according to customer requirements.

3.3 MAXIMUM PRESSURE CONDITIONS

Item	Max Pressure (bar)	Min/Max Temperature (℃)	Test Pressure		Max Pressure (psi)	Min/Max Temperature (℉)	Test Pressure	
			Shell (bar)	Seat (bar)			Shell (psi)	Seat (psi)
HC-10014	14	30 ℃ to 65 ℃ (Max 110)	21.0	15	203	86–149(max 230)	305	223

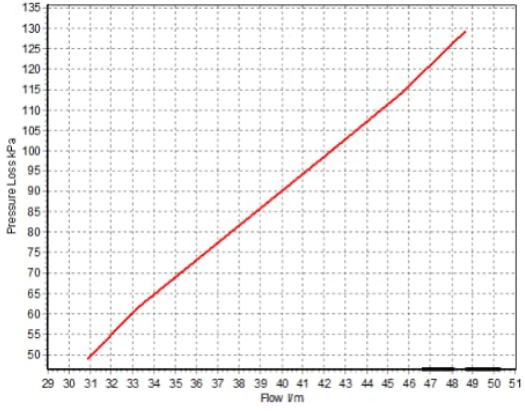

3.3 THERMOSTATIC MIXING VALVE

Male-Male thread (MxM)



3.4 CROSS SECTION

Male-Male thread (MxM)

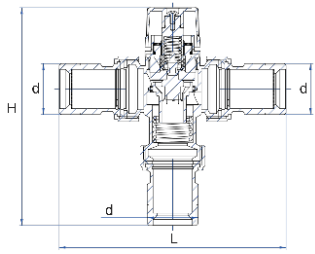

Table 3

Item	Size	L (mm)	H (mm)	d
HC-10014	1/2"	148	160	1/2"
HC-10014	3/4"	148	160	3/4"
HC-10014	1"	158	165	1"
HC-10014	1 1/4"	185	178	1 1/4"

ITEM	MIN	1	2	3	4	5	6	7	MAX
HC-10014	30	34	38	43	47	51	56	60	65

4 INSTALLATION AND OPERATION

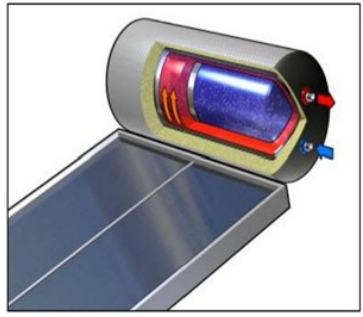

4.1 In solar thermal systems, hot-water temperature in the storage tank can rise to extremely high levels (up to approx. 98°C) during strong sunlight and low water usage. Water above 50°C can cause rapid burns, so it must not be supplied directly to users.

4.2 A thermostatic mixing valve must be installed to reduce the outlet temperature to a safe level (recommended not exceeding 50°C) and maintain a constant mixed temperature despite variations in inlet temperature or pressure.

4.3 Before installation, flush the system to remove sediment or impurities. Ensure pipes are clean and use appropriate sealing materials such as PTFE tape or thread sealant.

4.4 Connect the hot, cold, and mixed outlets to the valve ports marked H (Hot), C (Cold), and MIX. Make sure pipe threads do not bottom out inside the valve ports to avoid damaging internal sealing surfaces.

4.5 When tightening connections, hold the hexagonal part of the valve body closest to the thread to prevent twisting or deforming the valve.

4.6 Keep pipes aligned and straight on both sides of the valve to avoid bending stresses or misalignment. Install the valve horizontally or vertically according to the installation diagram.

4.7 To prevent backflow, install a check valve in the system. Strainers on the hot and cold inlets are recommended and the valve includes integrated inlet strainers.

4.8 The thermostatic element automatically adjusts the ratio of hot and cold water. A temperature-sensitive piston regulates flow on both sides to maintain a stable outlet temperature even when hot water temperature drops or pressure varies.

4.9 Internal components are built from high-temperature-resistant and anti-scale materials, ensuring continuous operation up to 100°C and long-term performance without seizing or drift.

4.10 In case of cold-water supply failure, the valve automatically shuts off hot water to prevent scalding. If hot-water supply fails, the cold-water flow is also closed to avoid thermal shock. This function requires a minimum 10°C difference between hot inlet and mixed outlet temperature.

4.11 The control knob allows temperature adjustment using a graduated scale (30°C to 65°C). Standard operating conditions: hot water 68–80°C, cold water 15–20°C, pressure 3 bar.

4.12 To lock the adjusted temperature, loosen the screw on the temperature knob, align it with the locking groove, and press it to secure the setting and prevent accidental changes.

4.13 For commissioning, verify the outlet temperature using a suitable digital thermometer. Qualified technicians should perform all adjustments according to relevant plumbing regulations.

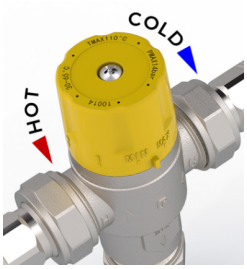



4.14 Application diagram: system with thermal integration:

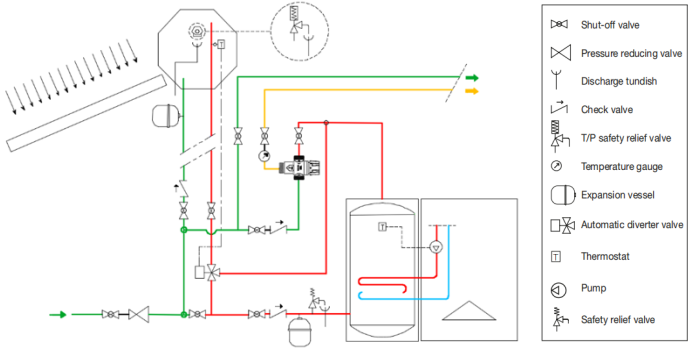

4.15 Application diagram: system with thermal integration and recirculation:

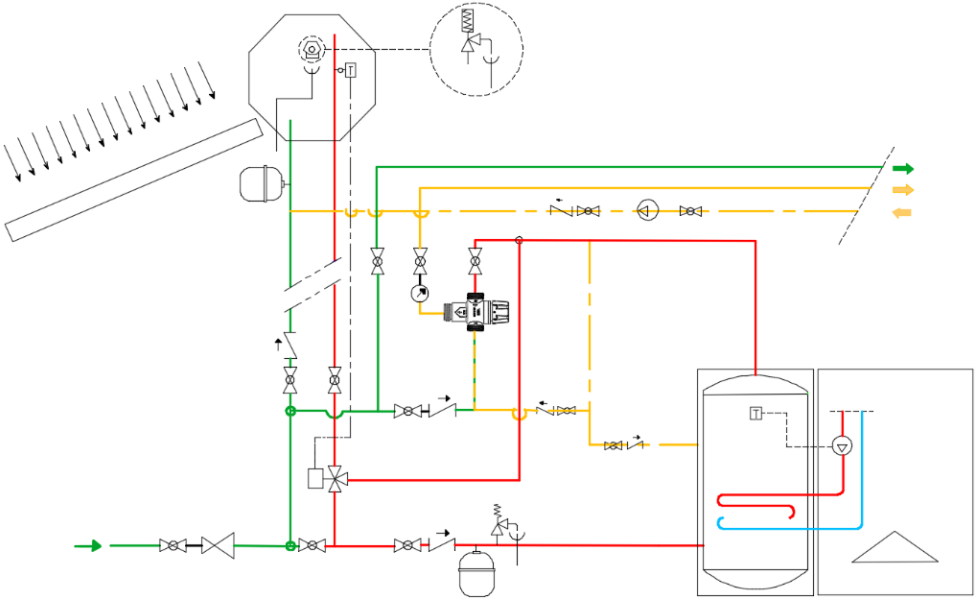

5 DESCRIPTION AND WORK

The adjustable solar thermostatic mixing valve is used in solar thermal systems for domestic hot-water production. It maintains the set outlet temperature by automatically compensating for variations in inlet hot and cold water temperature, pressure, and flow rate.

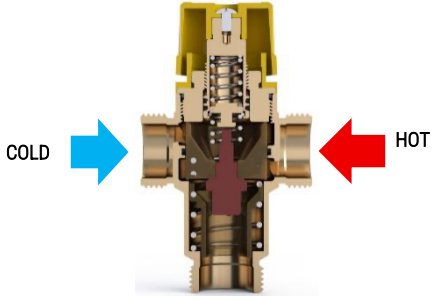

6 MAINTENANCE

6.1 Articles must be operated within the values specified in para. 3, para. 4 of this technical passports.

6.2 To extend the service life of sealing elements, it is recommended to open / close the HOME CREATOR mixing valve at least 1 time in 6 months.

7 STORAGE AND TRANSPORTATION CONDITIONS

Products are transported in the packaging of the manufacturer in accordance with the rules operating on the mode of transport used.

8 RESOURCES, LIFETIMES AND MANUFACTURER'S (SUPPLIER'S) WARRANTIES

8.1 Average full-service life of a mixing valve: 10 years.

8.2 The manufacturer (supplier) guarantees the operability and compliance with the safety requirements of the product if the consumer complies with this technical passport HC-10014.

8.3 Warranty period: 5 years from the date of sale to the end user / from the date of commissioning of the object. The warranty covers all defects caused by the manufacturer.

8.4 When making claims about the quality of the goods, the buyer provides the following documents:

8.4.1 An application in any form, which indicates:

a) Name of the organization or F. And. About. buyer, actual address, contact phone number;

b) The name and address of the organization that carried out the installation of the product; c) a brief description of the malfunction of the product.

8.4.2 A document confirming the purchase of the product (cash/sales receipt, waybill, receipt, etc.).

8.4.3 Photos of the product confirming its malfunction, or the product itself.

8.4.4 Act of hydraulic testing of the system in which the product was mounted.

8.4.5 Completed warranty card.

8.5 The warranty does not cover defects arising from:

8.5.1 Violations of the passport regimes of storage, transportation, installation and operation of the product.
8.5.2 The presence of traces of extraneous interference in the design of the product.
8.5.3 Effects of substances aggressive to the materials of the product.
8.5.4 Effects on the product of excessive force.
8.5.5 Impact on the product of fire, natural disasters and other force majeure circumstances.
8.6 The warranty also does not apply in cases where the manufacturer's markings are partially or completely changed, erased, removed or illegibly visible.
8.7 In case of unreasonableness of the claim, the costs of diagnostics and examination of the product are paid by the buyer.
8.8 Manufacturer HOME CREATOR GROUP LTD. reserves the right to make changes to the design of the product that do not affect the declared technical characteristics.
8.9 Claims for the quality of the goods can be made during the warranty period at the address of the manufacturer HOME CREATOR GROUP LTD.

9 CERTIFICATE OF ACCEPTANCE AND PACKAGING

9.1 Mixing valves packed by the manufacturer.
9.2 Packaging ensures the safety of products subject to compliance with clause 7.
9.3 The materials and substances used for packaging are safe for people and the environment.
9.4 The mixing valve is in the open position.
9.5 The batch of mixing valves is recognized as suitable for operation and is accepted with 100% control at RPR = 2.5 * PW.

Date of manufacture		QUALITY Mark	

10 **NOTE**

WARRANTY CARD No _____

Name: THERMOSTATIC MIXING VALVE

Article: HC-10014 Quantity: _____

Name and Address of the trading organization: _____

Date of Sale: _____ Seller's full name / Seller's signature, Stamp / seal of the trading organization: _____

I agree with the terms of the warrant: _____

Product Return Mark: _____

Buyer's signature: _____

Date / Signature: _____

View your passport Online:

WARRANTY PERIOD: 5 YEARS

Warranty is provided.
according to paragraph 8 of the technical passport HC-10014

HOME CREATOR GROUP LTD | LONDON, UK
Add: 167-169 Great Portland Street, London,
W1W 5PF, United Kingdom
Web: www.homecreatorgroup.com
Tel: +971 558432055